Measuring amplifier GSV-1A 4-20-12/250/2/M12

Item number: 4708



Highlights

- robust aluminum housing
- Protection class IP66

The measuring amplifier GSV-1A is ideal for assembly near the sensor, because the aluminum housing (protection class: IP66) is very compact and for the detection of static and dynamic signals from sensors with strain gauges.

The automatic zero adjustment store settings permanently in the nonvolatile memory also by voltage interruption.

The force sensor is connected to the terminals 1 to 4.

The power supply (11-30 volts) is connected to terminals 7 and 5 (ground).

For zero adjustment, the terminal 8 connected to the power supply or a control signal is set between 5 volts and 24 volts.

The amplification can be switched via plug-in jumpers 1-2-4-10-fold.

ME-Meßsysteme GmbH
Eduard-Maurer-Str. 9
DE-16761 Hennigsdorf

Tel: +49 (0)3302 8982 4 10
Mail: vertrieb@me-systeme.de
Web: www.me-systeme.de

Stand: 10.03.2026

Technical Drawing

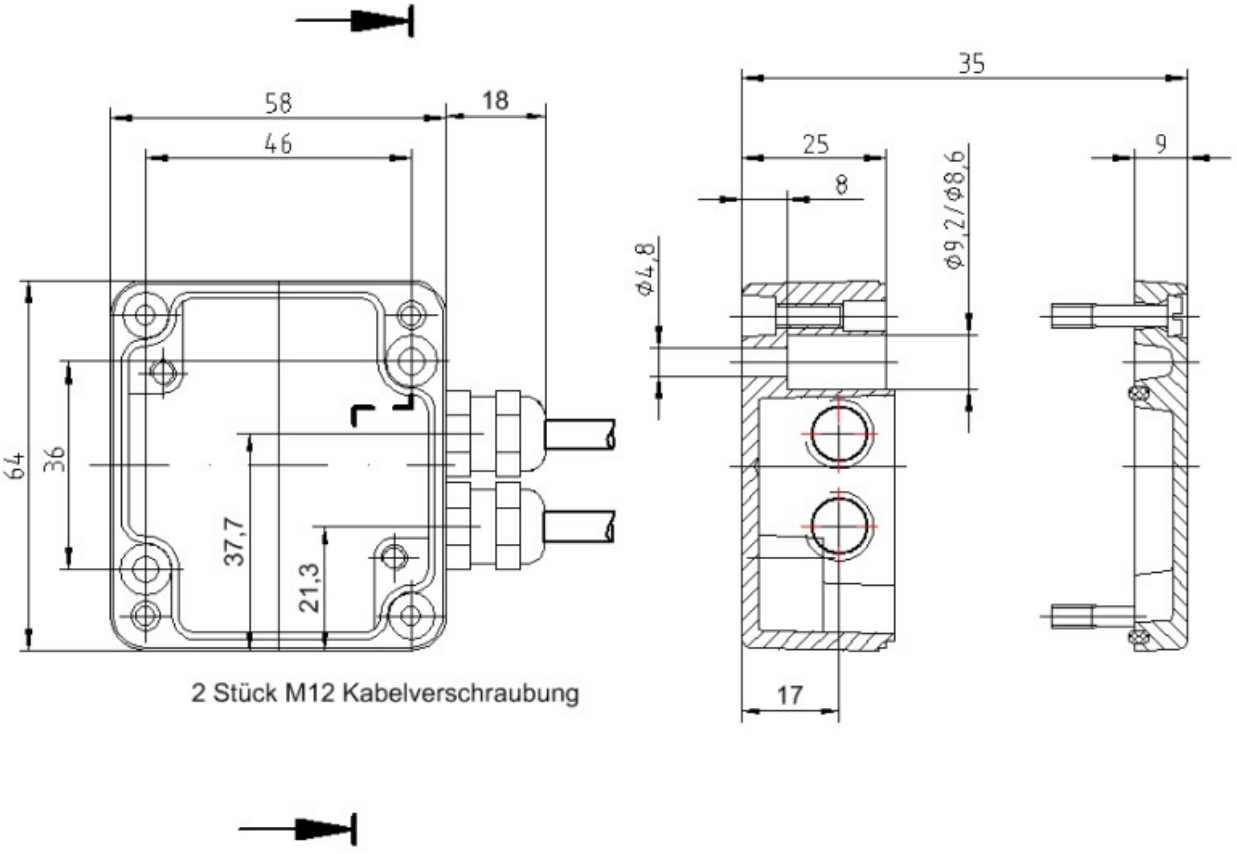

ME-Meßsysteme GmbH
Eduard-Maurer-Str. 9
DE-16761 Hennigsdorf

Tel: +49 (0)3302 8982 4 10
Mail: vertrieb@me-systeme.de
Web: www.me-systeme.de

Stand: 10.03.2026

Technical Data

Basic Data		Unit
Dimensions	58 x 64 x 35	mm³
Housing	Aluminium	
Connection	Plug connector	
Connection type	M12	
Number of channels	1-channel	
Functions	Tara, Range	

Input analog		Unit
Input sensitivity-steps	0.2 | 0.5 | 1.0 | 2.0	mV/V

Output analog		Unit
Number of analog outputs	1	
Current output from	4	mA
Current output to	20	mA
Zero adjustment to	12	mA
Maximum load resistance - current output	47	Ohm

Accuracy data		Unit
Accuracy class	0,1%	
Relative linearity error	0.02	%FS
Temperature effect on the zero point	0.01	%FS/10°C
Temperature effect on the measuring sensitivity	0.1	%RD/10°C

Measuring frequency		Unit
Limit frequency (analog)	250	Hz

ME-Meßsysteme GmbH
Eduard-Maurer-Str. 9
DE-16761 Hennigsdorf

Tel: +49 (0)3302 8982 4 10
Mail: vertrieb@me-systeme.de
Web: www.me-systeme.de

Stand: 10.03.2026

Supply		Unit
Supply voltage from	11	V
Supply voltage to	29	V
Current consumption from	55	mA
Current consumption to	75	mA
Strain gauge bridge supply	5	V

Interface		Unit
Type of the interface	Analog	
Quantity of the interface	1	

Zero Adjustment		Unit
Type	Digital	
Tolerance	5	mV
Time period	90	ms
Debouncing time	4	ms
Trigger level from	3.5	V
Trigger level to	30	V
Trigger edge	falling	

Environmental Data		Unit
Rated temperature range from	-10	°C
Rated temperature range to	65	°C
Operating temperature range from	-40	°C
Operating temperature range to	85	°C
Environmental protection	IP66	

Mounting

ME-Meßsysteme GmbH
Eduard-Maurer-Str. 9
DE-16761 Hennigsdorf

Tel: +49 (0)3302 8982 4 10
Mail: vertrieb@me-systeme.de
Web: www.me-systeme.de

Stand: 10.03.2026

Pin configuration

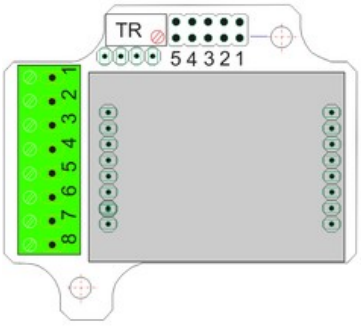

The GSV-1A measurement amplifier can also optionally be delivered with type 763 plug connectors.

Terminal			Series 763 (M12) socket		Series 763 (M12) pins	
1	-UD Negative differential input		4	black		
2	+UD Positive differential input		3	blue		
3	+US : Positive bridge excitation (5V)		1	brown		
4	-US : Negative bridge excitation (GND)		2	white		
5	GND: Ground				3+5	blue+grey
6	+UA : Analogue output				2	white

7	+UB Voltage supply (12V or 24V)			1	brown
8	T: Control input zero adjustment (with +UB)			4	black

Adjustment of the input range

The input sensitivity can be adjusted by moving the jumper. The input sensitivity for position 1 is indicated in the type designation. In position 5, the amplification can be set in a continuously variable manner using the “TR” trimmer.

Position	Amplification Factor	Input sensitivity in mV/V for GSV-1A with 2 mV/V	Input sensitivity in mV/V for GSV-1A with 3.5 mV/V
1	1	2	3.5
2	2	1	1.75
3	4	0.5	0.85
4	10	0.2	0.35
5	1...10	2 ... 0.2	3.5 ... 0.35

For an amplification factor 1, the complete output signal is reached at a modulation of 100%.

For an amplification factor of 2, the complete output signal is already reached at a modulation of 50%.

Various versions are available, e.g. with voltage output +-5V, with voltage output +-10V, with current output 4...20mA, and with various input sensitivities +-2mV/V and +-3.5mV/V.

ME-Meßsysteme GmbH
Eduard-Maurer-Str. 9
DE-16761 Hennigsdorf

Tel: +49 (0)3302 8982 4 10
Mail: vertrieb@me-systeme.de
Web: www.me-systeme.de

Stand: 10.03.2026