Measuring amplifier GSV-15HSW

Item number: 3286



Highlights

- Measuring amplifier with analogue output for sensors with strain gauge
- Output signal -10V...+10V or 4...20mA configurable
- Zero setting input via digital input
- Autoscale function for automatic adjustment of the input sensitivity
- 2 threshold value switch, potential-free
- Peak value function configurable
- Supply voltage 11...28 volt

The measuring amplifier GSV-15HSW is suitable for connection with strain gauges, such as force sensors, torque sensors or strain sensors. It has two threshold value outputs that can be set in 10% levels via coding switches.

An automatic zero adjustment can be triggered via a digital input or via a push switch. The zero point is stored in a non-volatile memory.

With the “scale function”, any input size in a range between 0.2 mV/V and 3.5 mV/V can be scaled to an analogue output voltage of 10V or 20mA. The scale function is triggered via a push switch or via the digital input “scale”. A coding switch enables you to set whether scale is to be carried out at full load or part load: For the scale function, input signals from 10% to 100% can be selected in 10% levels.

The integrated digital filter facilitates the formation of a stable, low-noise and zero point stable output signal especially at low frequencies from 5...105 Hz, and also at high amplifications of low input signals of 0.2 mV/V for example.

The resolution at the analogue output is 4096 parts. The sampling frequency can also be set to 1000 Hz in the factory. The analogue output can be configured as current or voltage output by means of jumpers.

The measuring amplifier can also be designed for the connection of acceleration sensors in the factory. The amplitude of the acceleration signal is then displayed at the output.

ME-Meßsysteme GmbH
Eduard-Maurer-Str. 9
DE-16761 Hennigsdorf

Tel: +49 (0)3302 8982 4 10
Mail: vertrieb@me-systeme.de
Web: www.me-systeme.de

Stand: 24.04.2026

Technical Drawing

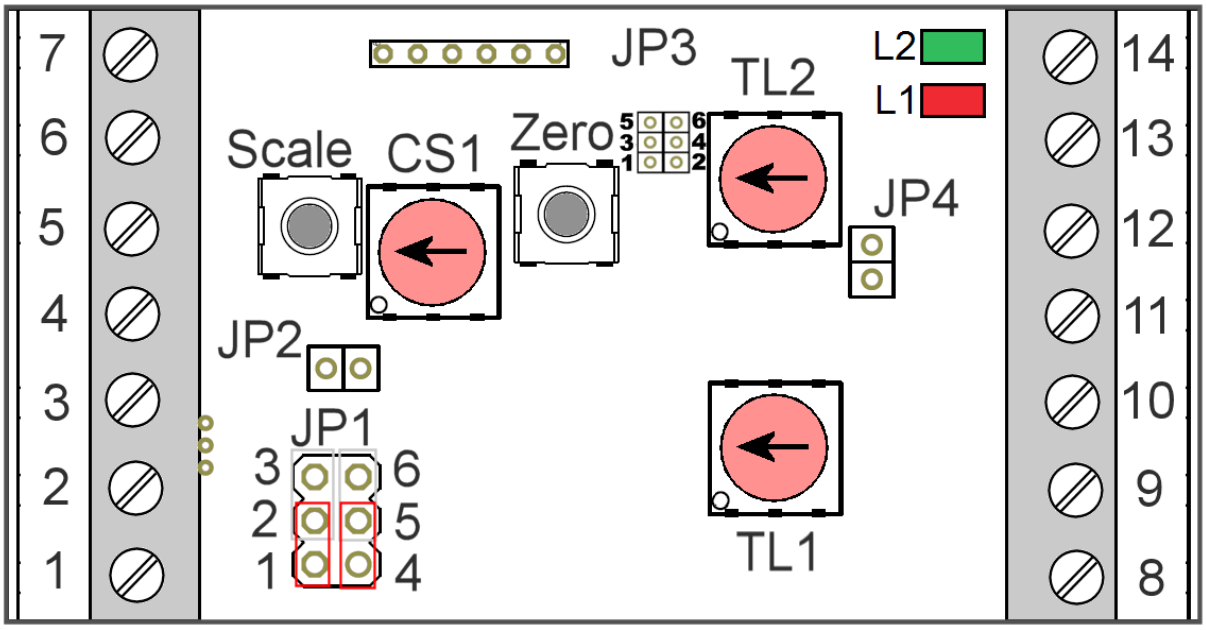

Technical Data

Basic Data		Unit
Dimensions	75 x 38 x 45	mm³
Housing	Din rail	
Connection	Screw terminal	
Number of channels	1-channel	
Functions	Tara, Scale, Threshold	

Input analog		Unit
input sensitivity-stepsless from	0.2	mV/V
input sensitivity-stepsless to	3.5	mV/V

Output analog		Unit
Number of analog outputs	1	
Voltage output from	-10	V
Voltage output to	10	V
Output resistance - voltage output	33	Ohm
Current output from	4	mA
Current output to	20	mA
Maximum load resistance - current output	300	Ohm

Accuracy data		Unit
Accuracy class	0,1%	
Temperature effect on the zero point	0.05	%FS/10°C
Temperature effect on the measuring sensitivity	0.01	%RD/10°C
Resolution	16	Bit

ME-Meßsysteme GmbH
Eduard-Maurer-Str. 9
DE-16761 Hennigsdorf

Tel: +49 (0)3302 8982 4 10
Mail: vertrieb@me-systeme.de
Web: www.me-systeme.de

Stand: 24.04.2026

Measuring frequency		Unit
Data frequency from	5	Hz
Data frequency to	105	Hz
Sampling frequency	105	Hz

Supply		Unit
Supply voltage from	11	V
Supply voltage to	28	V
Strain gauge bridge supply	5	V

Interface	Unit

Zero Adjustment	Unit

Filter	Unit

Environmental Data		Unit
Rated temperature range from	-10	°C
Rated temperature range to	85	°C
Operating temperature range from	-40	°C
Operating temperature range to	85	°C
Environmental protection	IP40	

Mounting

Terminal assignment

Terminal	Designation	Description

1	U_A	Analogue output -10V...+10V or 4mA...20mA
2	GND_A	Earth analogue output
3	Scale	Digital input 11V...28V “scale”
4	$-U_S$	Negative bridge power supply
5	$+U_S$	Positive bridge power supply
6	$+U_D$	Positive bridge input
7	$-U_D$	Negative bridge input
8	$+U_B$	Supply voltage 11V ... 28V DC
9	GND_B	Earth supply voltage
10	SW1a	Switching output 1a
11	SW1b	Switching output 1b

ME-Meßsysteme GmbH
Eduard-Maurer-Str. 9
DE-16761 Hennigsdorf

Tel: +49 (0)3302 8982 4 10
Mail: vertrieb@me-systeme.de
Web: www.me-systeme.de

12	SW2a	Switching output 2a
13	SW2b	Switching output 2b
14	Zero	Digital input 11V ... 28V DC “Zero”

Buttons and selector switches

JP1	Closing of 1-2 and 4-5: Current output 2-3 and 5-6: Voltage output
JP2	Opening: closing the “scale” function at the button on the circuit board
JP3	Opening of 1-2: closing the “zero” function at the button on the circuit board Closing of 3-4: threshold values are inverted Closing of 5-6: default (producing factory settings; restart required)
JP4	Opening: switching on the maximum value mode
Scale	Operation (>2s) triggers “scale” function
Zero	Operation (>1s) triggers “zero” function

CS1	Selector switch to select the percentage of the measuring range at which the “scale” function is carried out. Setting in 10% steps from 10% to 100%
TL1	Selector switch for switch output 1 for selecting the threshold value in percentage of the measuring range. Setting in 10% steps from 10% to 100%
TL2	Selector switch for switch output 2 for selecting the threshold value in percentage of the measuring range. Setting in 10% steps from 10% to 100%

Light diodes

L2	green, continuous light: green: flashing:	Operational readiness indicator: Switching output 2 active, threshold value 2 exceeded
L1	red: flashing red continuous light	Switching output 1 active, threshold value 1 exceeded Error indicator: • scale function was triggered without load or with negative load, or

		• measuring range was exceeded, or • scale or zero input is active;

Notes:

1. The position of the selector switch is only taken when the supply voltage is switched on. After a change, it has to be switched off and on.
2. The jumpers JP2 and JP3 must be activated, otherwise the scale function and zero function are closed.
3. The position “0” of the selector switches CS1, TL1 and TL2 corresponds to 100%. The positions “1” to “9” correspond to 10% to 90%.
4. In the delivery condition, the set input sensitivity is 2 mV/V and tare 0 mV/V; this corresponds to the factory settings.

Operating the GSV-15HSW

The measuring amplifier GSV-15HSW optionally supplies an analogue output signal from -10.0V to 10.0V or 4mA...20mA. The default input sensitivity is 2 mV/V in its delivery condition.

The input sensitivity (the measurement range) can be adjusted using the “scale function”.

The threshold value encoder can be selected in 10% steps from (currently set) measuring range.

Zero setting function (zero)

The output signal is automatically adjusted to 0.0V by applying a control pulse at the “zero” input. The control pulse must be at least 1s high and then 100 ms low. Tare functions within the range from 0.0 mV/V to 3.5 mV/V.

Scale function (scale)

The measuring amplifier has a scale function. A high level at the “scale input” scales the current measuring signal to 10.0V or 20mA, or to the percentage of the output signal selected with the selector switch “CS1”. The sensor must be tared in an unloaded state before the scale function is triggered. The sensor is then mechanically stressed. The output signal is automatically scaled by applying a control pulse at the “scale” input or by operating the “scale” button. The control pulse must be at least 2s high and then 100 ms low. The scaling of the measuring amplifier only functions in the positive measuring range. The input signal must be greater than 0.1 mV/V.

Configuring the scale function

The end value can also be scaled with less than 100% of the measuring range.

The calibration load proportion of the measuring range can be set with the selector switch “CS1” in 10% steps.

Example

A set of scales should supply 20mA for 10t. To calibrate, only 2t are available.

Procedure:

-

Set scale to 20%.

-

Carry out zero adjustment for unloaded scales

-

Apply 2t

-

Perform scaling function

Threshold value

The threshold value switch reacts when the threshold value is exceeded.

The potential-free switching outputs “a” and “b” are electrically connected when the threshold value is exceeded. They are opened accordingly when a jumper JP3 pin 3 and 4 is plugged in.

The standard threshold value is 90% of the measurement range. The threshold value output is switched to earth when 90% of the measurement range is exceeded. If the strain falls below 89%, the output switches to high-impedance.

Configuring the threshold value function

The thresholds of the threshold value switches 1 and 2 can each be set in 10% steps with the selector switches TL1 and TL2.

Establishing factory settings

JP1	Voltage output	2-3 closed 5-6 closed
JP2	Scale function activated	closed
JP3	Zero function activated	closed
JP4	Maximum value mode deactivated	closed
JP3	Loading the manufacturer configuration: input sensitivity 2 mV/V SW1=100%, SW2=100%	5-6 are closed when restarting; then open 5-6: