Strain Sensor DA120i 010-5

Item number: 11321



Highlights

- contains integrated GSV-6L evaluation electronics
- is suitable for measurements in harsh environments due to its enclosed design

Thanks to its closed construction, the DA120 strain sensor is suitable for measuring strain and force on machine elements and components in harsh environments.
Easy installation by screwing on with 4 M6 screws. Mechanical strain on the component is transferred to the strain sensor using via 4 fixing screws and is transformed into an electrical output signal.
Example applications include force monitoring level measurement.
Output signal, thermal behaviour and transmission ratio depend on the geometry and combination of materials. Therefore, calibration is performed by applying of a force.

The Strain sensor DA120e is implemented for the measurement of loads. Application areas are machines, buildings, vehicules, containers and silos. The strain sensor must be fastened with 4 bolts M6. The strain on the surface of the constructional element is measured by the strain sensor due to the bolted-assembly.

The “DA120i” strain sensor includes an integrated GSV-6L measuring amplifier. The measuring amplifier has a voltage- or current output and a threshold value output. Amplification, zero point and threshold value can each be programmed via a digital input.

ME-Meßsysteme GmbH
Eduard-Maurer-Str. 9
DE-16761 Hennigsdorf

Tel: +49 (0)3302 8982 4 10
Mail: vertrieb@me-systeme.de
Web: www.me-systeme.de

Stand: 20.03.2026

Technical Drawing

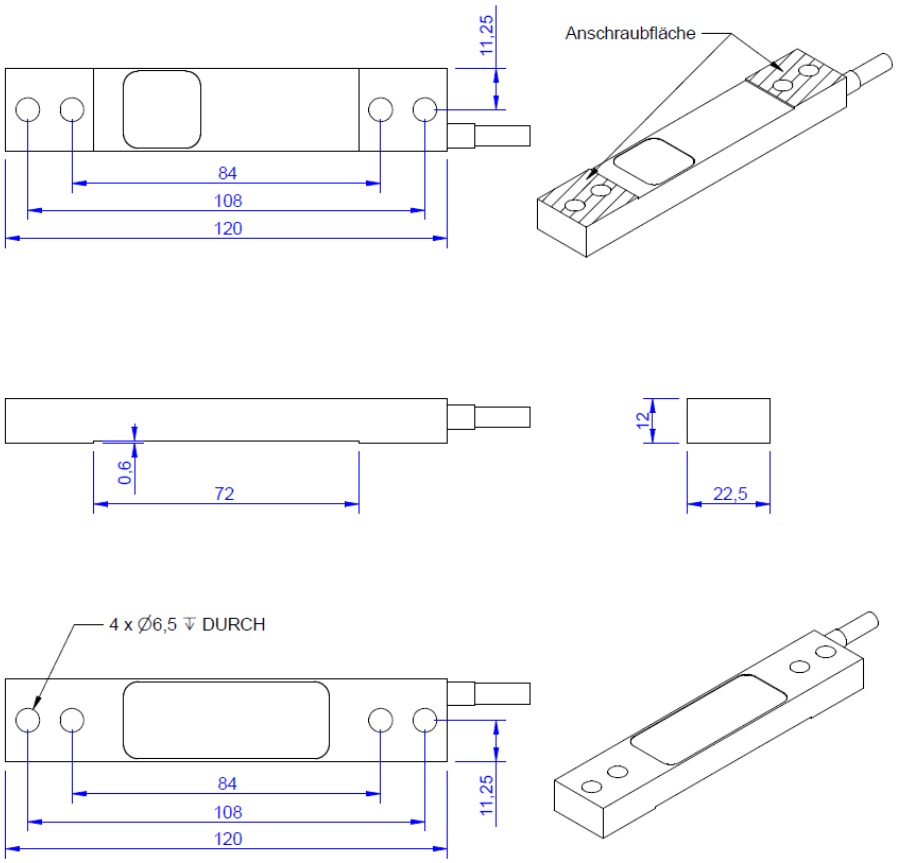

ME-Meßsysteme GmbH
Eduard-Maurer-Str. 9
DE-16761 Hennigsdorf

Tel: +49 (0)3302 8982 4 10
Mail: vertrieb@me-systeme.de
Web: www.me-systeme.de

Stand: 20.03.2026

Technical Data

Basic Data		Unit
Type	Dehnungsaufnehmer	
Nominal strain	100	µm/m
Operating strain	400	µm/m
Material	tool steel	
Surface	electrogalvanized	
Dimensions	120 x 20 x 12 mm³	

Electrical Data		Unit
Input resistance	350	Ohm
Tolerance input resistance	1	Ohm
Output resistance	350	Ohm
Tolerance output resistance	1	Ohm
Insulation resistance	5	GOhm
Rated range of excitation voltage from	2.5	V
Rated range of excitation voltage to	5	V
Operating range of excitation voltage from	2.5	V
Operating range of excitation voltage to	10	V

Analog Output		Unit
Voltage output from	0	V
Voltage output to	10	V
Output resistance - voltage output	0.12	Ohm
Current output from	0	mA
Current output to	20	mA
Zero adjustment to	5	V

ME-Meßsysteme GmbH
Eduard-Maurer-Str. 9
DE-16761 Hennigsdorf

Tel: +49 (0)3302 8982 4 10
Mail: vertrieb@me-systeme.de
Web: www.me-systeme.de

Stand: 20.03.2026

Measuring Frequency		Unit
Data frequency from	10	Hz
Data frequency to	25	kHz
Sampling frequency	50	kHz

Supply		Unit
Supply voltage from	9	V
Supply voltage to	29	V
Current consumption from	22	mA
Strain gauge bridge supply	3	V

Pin assignment

Channel	Symbol	Description	Wire color	PIN
	Ub	Supply voltage (24V or 12V DC)	brown	1
	GND	Connect ground, supply voltage	white	2
	Ua	Output signal 4...20mA / 0...10V / ±10V	green	3
	Tara	Control input for zero balance	yellow	4
	Scale	Control input for amplification factor	grey	5
	SW	Threshold output	pink	6
	GND	Connect ground, signal	blue	7
		shiled (is not connected with the housing)	transparent	

With integrated electronics GSV-15L / GSV-6L.Ground signal connected to ground supply internally.

ME-Meßsysteme GmbH
Eduard-Maurer-Str. 9
DE-16761 Hennigsdorf

Tel: +49 (0)3302 8982 4 10
Mail: vertrieb@me-systeme.de
Web: www.me-systeme.de

Stand: 20.03.2026