Force Sensor CSP-M100t/C2

Item number: 1487



The pressure force load cell CSP-M with a welded case is hermeticaly proof and a 4 column construction. So it is almost unsusceptible against exzentric force.

Even though the cell is able to carry 100t its hight is just 185mm.

On the basis of the geometry of a spherical cap and an even pressing surface, the load cell can also be used to calibrate high pressure compactors or to construct vihicles and track scales as well.

A central windingand a spigot on the underside make it possible to install the sensor easiely.

Optional special version

- Suitable for cleanrooms

ME-Meßsysteme GmbH
Eduard-Maurer-Str. 9
DE-16761 Hennigsdorf

Tel: +49 (0)3302 8982 4 10
Mail: vertrieb@me-systeme.de
Web: www.me-systeme.de

Stand: 20.03.2026

Technical Drawing

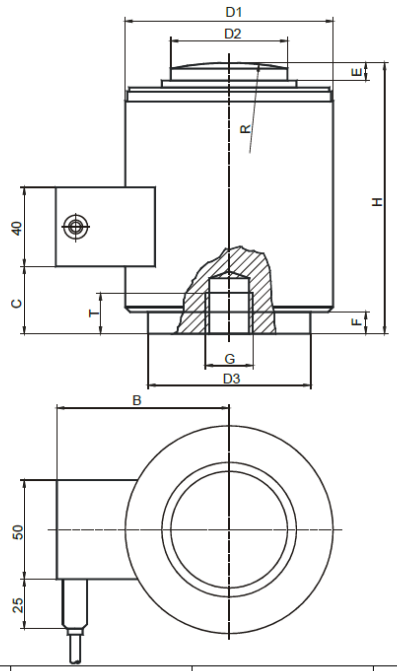

Nennlast	10t, 25t	40t, 60t	100t
D1	73	105	152,4
D2	31,8	58,7	79,2
D3	58	82,5	123,8
H	82,5	127	184,2
R	152	152	432
C	12	34	72,3
E	6,5	8	23,6
F	1,8	11	21,8
G	M12 x 1,75	M20x2,5	M20x2,5
T	11	20	20

ME-Meßsysteme GmbH
Eduard-Maurer-Str. 9
DE-16761 Hennigsdorf

Tel: +49 (0)3302 8982 4 10
Mail: vertrieb@me-systeme.de
Web: www.me-systeme.de

Stand: 20.03.2026

Technical Data

Basic Data		Unit
Type	Wägezelle	
Force direction	Compression	
Operating force	150	%Fs
Rated displacement	0.36	mm
Lateral force limit	10	%Fs
Material	Stainless steel	
Dimensions	Ø 73 mm x 82,5 mm ... Ø 152 mm x 184 mm	
Breaking force	400	%Fs
Variants	10t...100t	

Electrical Data		Unit
Input resistance	450	Ohm
Tolerance input resistance	5	Ohm
Output resistance	480	Ohm
Tolerance output resistance	5	Ohm
Insulation resistance	5	GOhm
Rated range of excitation voltage from	2.5	V
Rated range of excitation voltage to	5	V
Operating range of excitation voltage from	1	V
Operating range of excitation voltage to	10	V
Zero signal	2	%Fn
Rated output	2	mV/V
relative error of characteristic value	0.02	mV/V

ME-Meßsysteme GmbH
Eduard-Maurer-Str. 9
DE-16761 Hennigsdorf

Tel: +49 (0)3302 8982 4 10
Mail: vertrieb@me-systeme.de
Web: www.me-systeme.de

Stand: 20.03.2026

Accuracy Data		Unit
Accuracy class	0,02	
Relative zero signal hysteresis	0.0167	%Fs
Temperature effect on zero signal	0.0056	%Fs / 5°C
Temperature effect on characteristic value	0.005	%Rd / 5°C
Relative creep	0.0245	%Fs
Relative repeatability error	0.01	%Fs
Cross-sensitivity	0	

OIML Accuracy Data		Unit
Zero return, 30 min.	0.0245	±% S

Environmental Data		Unit
Rated temperature range from	-10	°C
Rated temperature range to	40	°C
Operating temperature range from	-40	°C
Operating temperature range to	80	°C
Storage temperature range from	-40	°C
Storage temperature range to	90	°C

Abbreviation : RD: „Reading“; FS: „Full Scale“;1) The exact nominal sensitivity is indicated in the test report.

Pin Assignment

Channel	Symbol	Description	Wire color	PIN
	+Us	positive bridge supply	green	
	-Us	negative bridge supply	black	
	+Ud	positive bridge output	white	
	-Ud	negative bridge output	red	

Screen - transparent/orange

ME-Meßsysteme GmbH
Eduard-Maurer-Str. 9
DE-16761 Hennigsdorf

Tel: +49 (0)3302 8982 4 10
Mail: vertrieb@me-systeme.de
Web: www.me-systeme.de

Stand: 20.03.2026