Displacement Sensor CS05 36T

Item number: 4137

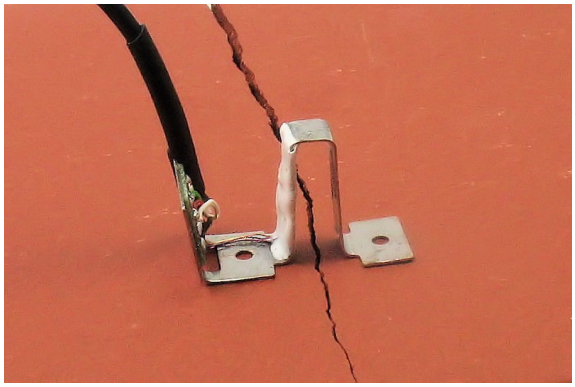

Crack propagation sensor in ultraminiature design. Applications: crack monitoring in listed buildings, monitoring of welding seams of machines, measurement of displacement and deformation on containers, tanks and components.
Due to the small weight the crack propagation sensor CS05 is suitable for deformation measurements with crash tests.

ME-Meßsysteme GmbH
Eduard-Maurer-Str. 9
DE-16761 Hennigsdorf

Tel: +49 (0)3302 8982 4 10
Mail: vertrieb@me-systeme.de
Web: www.me-systeme.de

Stand: 20.03.2026

Technical Drawing

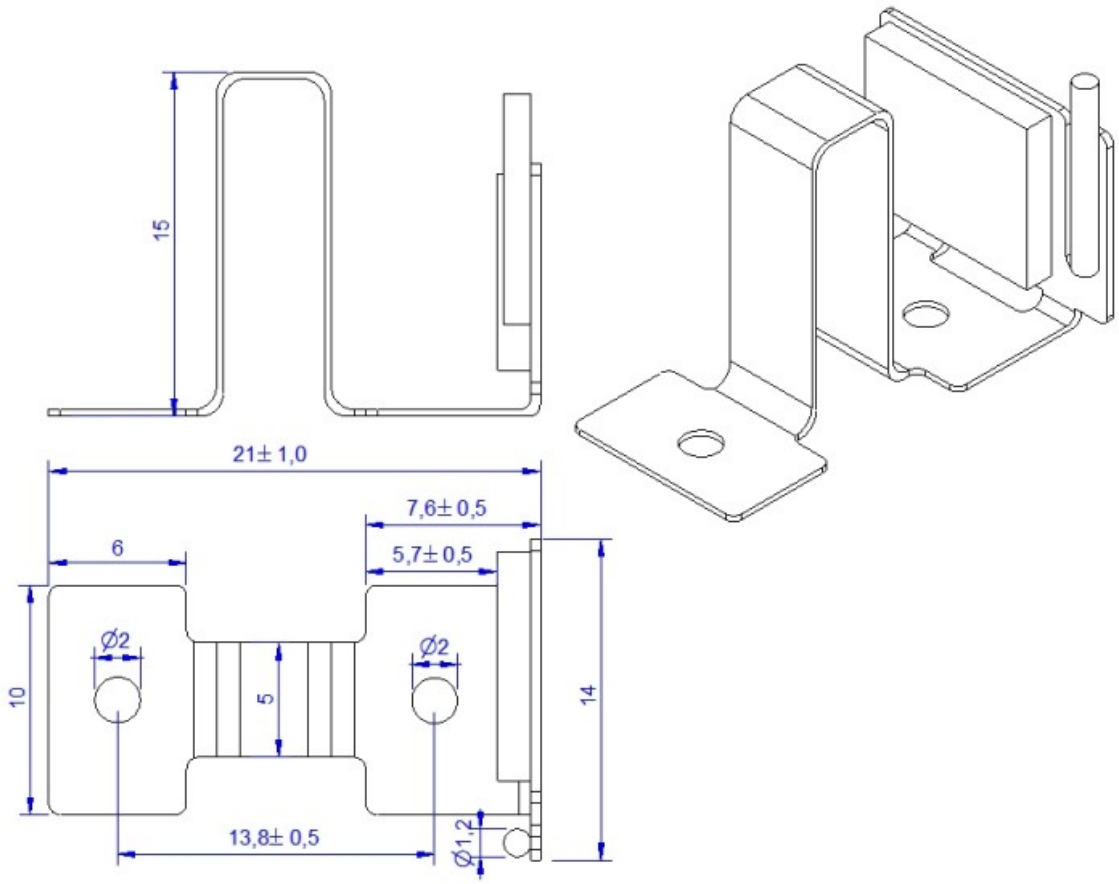

ME-Meßsysteme GmbH
Eduard-Maurer-Str. 9
DE-16761 Hennigsdorf

Tel: +49 (0)3302 8982 4 10
Mail: vertrieb@me-systeme.de
Web: www.me-systeme.de

Stand: 20.03.2026

Technical Data

Basic Data		Unit
Typ	Wegsensor	
Nennweg	0.5	
Gebrauchsweg	1	
Maximalweg	1.5	
Material	Stainless steel	
Abmessung	21mm x 14mm x 15mm	

Electrical Data		Unit
Input resistance	350	Ohm
Tolerance input resistance	10	±
Output resistance	350	Ohm
Tolerance output resistance	10	±
Insulation resistance	5x10^9	Ohm
Rated range of excitation voltage from	2.5	V
Rated range of excitation voltage to	5	V
Operating range of excitation voltage from	1	V
Operating range of excitation voltage to	5	V
Zero signal	0.5	mV/V
Rated output	1	mV/V / FS

ME-Meßsysteme GmbH
Eduard-Maurer-Str. 9
DE-16761 Hennigsdorf

Tel: +49 (0)3302 8982 4 10
Mail: vertrieb@me-systeme.de
Web: www.me-systeme.de

Stand: 20.03.2026

Accuracy Data		Unit
Relative linearity error	1	%Fn
Relative zero signal hysteresis	1	%Fn
Temperature effect on zero signal	0.5	%Fn/K
Temperature effect on characteristic value	0.05	%Sn/K
Relative creep	0.05	%Fn

Pin assignment

Channel	Symbol	Description	Wire color	PIN
	+Us	positive bridge supply	red	
	-Us	negative bridge supply	black	
	+Ud	positive bridge output	green	
	-Ud	negative bridge output	white	

Screen - transparent. Pressure load : positive output signal

ME-Meßsysteme GmbH
Eduard-Maurer-Str. 9
DE-16761 Hennigsdorf

Tel: +49 (0)3302 8982 4 10
Mail: vertrieb@me-systeme.de
Web: www.me-systeme.de

Stand: 20.03.2026