Force Sensor AS28

Item number: 2784

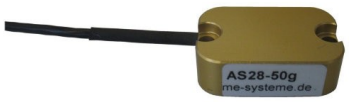

The acceleration sensor is based on the strain gage technology.The accelerometer sensor is characterized by small dimensions and a high resonance frequency.The AS28 can be used, for static measurements from 0 Hz, for example for measuring building vibrations or vibrations on bridges and other constructions.The temperature drift of the zero point noticed with a maximum of 0.2% / ° C, because semiconductor strain gages are used.The input range of the measuring amplifier must be large enough. (when full range should be used) The output signal of the AS28 is approximately 10 mV / V at full measuring range. The measuring amplifier GSV-1, GSV-2 and GSV-3 are available with matching input sensitivities of ± 5, ± 10 and ± 20 mV / V.The variant AS28e includes integrated electronics.The output is ± 2.00 volt for all sensors AS28e at full range.The zero point is set at 2.5 volt.The output signal of variant AS28 without electronic is within the range of 6 .. 15 mV / V and it is reported individually on a separate test protocol.

ME-Meßsysteme GmbH
Eduard-Maurer-Str. 9
DE-16761 Hennigsdorf

Tel: +49 (0)3302 8982 4 10
Mail: vertrieb@me-systeme.de
Web: www.me-systeme.de

Stand: 20.04.2026

Technical Drawing

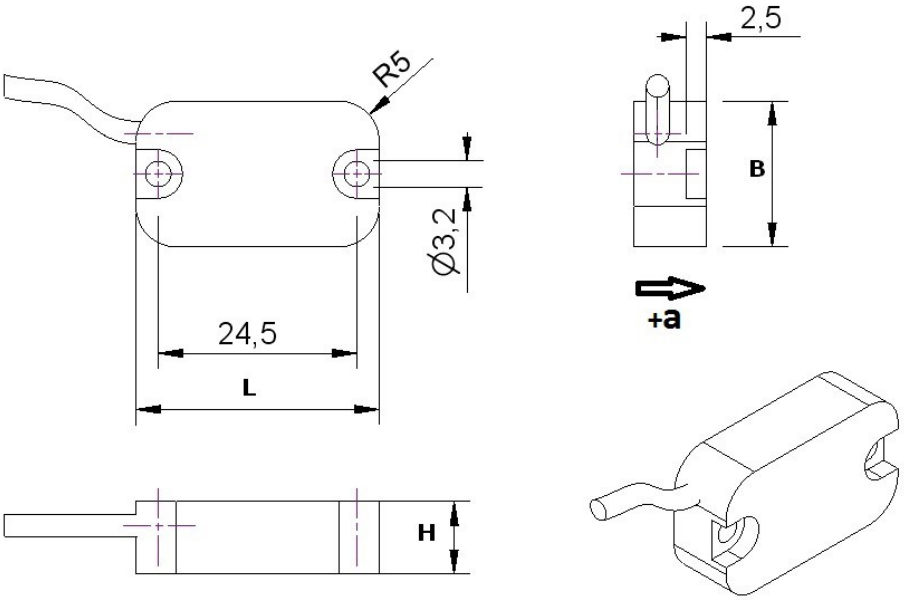

	H	L	B
AS28e	15	30	22
AS28	9	30	18

a+ positive Beschleunigung („acceleration“)

Technical Data

Basic Data		Unit

Electrical Data		Unit
Insulation resistance	2	GOhm
Rated range of excitation voltage from	2.5	V
Rated range of excitation voltage to	5	V
Operating range of excitation voltage from	2	V
Operating range of excitation voltage to	10	V
Zero signal	15	%FS
Characteristic value range from	6	mV/V/FS
Characteristic value range to	15	mV/V/FS

Accuracy Data		Unit
Relative linearity error	0.5	%FS
Temperature effect on zero signal	0.2	%FS/K
Temperature effect on characteristic value	0.1	%RD/K
Cross-sensitivity	1	%RD
Environmental Data		**Unit**
Rated temperature range from	-10	°C
Rated temperature range to	70	°C
Operating temperature range from	-10	°C
Operating temperature range to	85	°C
Environmental protection	IP66	

Abbreviation: RD: „Reading“; FS: „Full Scale“1) The exact sensitivity is indicated in the test report

ME-Meßsysteme GmbH
Eduard-Maurer-Str. 9
DE-16761 Hennigsdorf

Tel: +49 (0)3302 8982 4 10
Mail: vertrieb@me-systeme.de
Web: www.me-systeme.de

Stand: 20.04.2026

Pin Assignment

Channel	Symbol	Description	Wire color	PIN
	+Us	positive bridge supply	red	
	-Us	negative bridge supply	black	
	+Ud	positive bridge output	green	
	-Ud	negative bridge output	white	

Pressure load: positive output signal.
Shield- transparent.

ME-Meßsysteme GmbH
Eduard-Maurer-Str. 9
DE-16761 Hennigsdorf

Tel: +49 (0)3302 8982 4 10
Mail: vertrieb@me-systeme.de
Web: www.me-systeme.de

Stand: 20.04.2026