Force Sensor 102210kg/C3

Item number: 937



ME-Meßsysteme GmbH
Eduard-Maurer-Str. 9
DE-16761 Hennigsdorf

Tel: +49 (0)3302 8982 4 10
Mail: vertrieb@me-systeme.de
Web: www.me-systeme.de

Stand: 31.03.2026

Technical Drawing

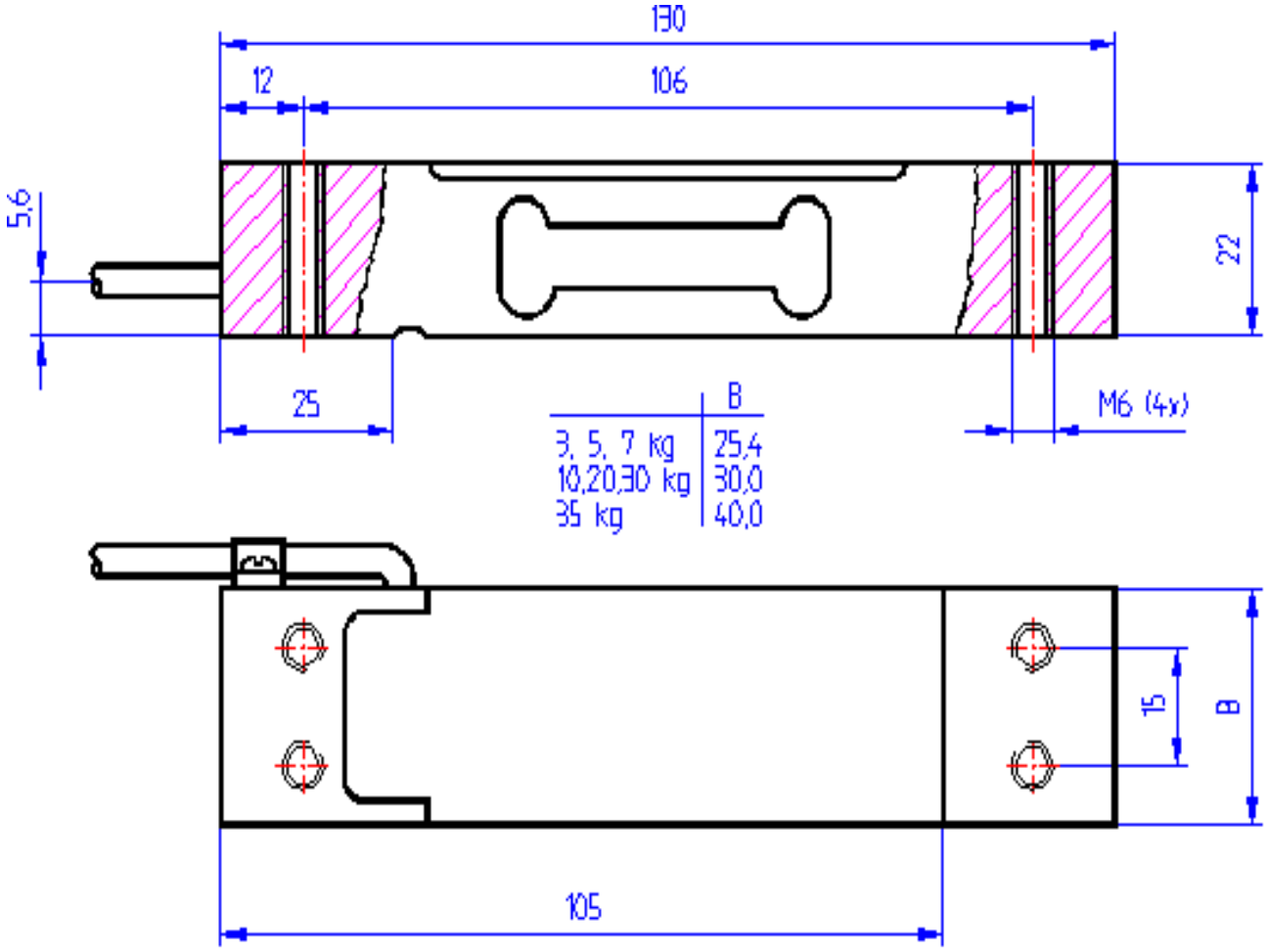

ME-Meßsysteme GmbH
Eduard-Maurer-Str. 9
DE-16761 Hennigsdorf

Tel: +49 (0)3302 8982 4 10
Mail: vertrieb@me-systeme.de
Web: www.me-systeme.de

Stand: 31.03.2026

Technical Data

Basic Data		Unit
Type	Wägezelle	
Force direction	Compression	
Rated force Fx	10	kg
Material	alluminum-alloy	
Dimensions	130mm x 25mm x 22mm...130mm x 40mm x 22mm	
Breaking force	300	%Fs
Variants	3kg... 50kg	

Electrical Data		Unit
Input resistance	415	Ohm
Tolerance input resistance	15	Ohm
Output resistance	350	Ohm
Tolerance output resistance	3.5	Ohm
Insulation resistance	2	GOhm
Rated range of excitation voltage from	2.5	V
Rated range of excitation voltage to	5	V
Operating range of excitation voltage from	1	V
Operating range of excitation voltage to	10	V
Zero signal	10	%Fn
Rated output	2	mV/V
relative error of characteristic value	0.1	mV/V

Accuracy Data	Unit

ME-Meßsysteme GmbH
Eduard-Maurer-Str. 9
DE-16761 Hennigsdorf

Tel: +49 (0)3302 8982 4 10
Mail: vertrieb@me-systeme.de
Web: www.me-systeme.de

Stand: 31.03.2026

OIML Accuracy Data		Unit
OIML accuracy class	C3	
Maximum no. of intervals (n)	3000	
Y = Emax /Vmin	6000	
Zero return, 30 min.	0.017	±% der aufgebrachten Las
Total error (per OIML R60)	0.02	±% S
Temperature effect on zero	0.0023	±% S / ° C
Temperature effect on output	0.001	±% of nominal load/°C
Eccentric loading error	0.0057	±% of nominal load/cm

Environmental Data		Unit
Rated temperature range from	-10	°C
Rated temperature range to	40	°C
Operating temperature range from	-30	°C
Operating temperature range to	70	°C
Storage temperature range from	-30	°C
Storage temperature range to	70	°C
Environmental protection	IP66	

Abbreviation : RD: „Reading“; FS: „Full Scale“;1) The exact nominal sensitivity is indicated in the test report;2) Nominal output for LCS130 250kg is 0,1%.

Pin Assignment

Channel	Symbol	Description	Wire color	PIN
	+Us	positive bridge supply	green	
	-Us	negative bridge supply	black	
	+Ud	positive bridge output	red	
	-Ud	negative bridge output	white	

Shield- transparent.

ME-Meßsysteme GmbH
Eduard-Maurer-Str. 9
DE-16761 Hennigsdorf

Tel: +49 (0)3302 8982 4 10
Mail: vertrieb@me-systeme.de
Web: www.me-systeme.de

Stand: 31.03.2026