KTF SERIES
DISC COUPLING FOR TF 300 SENSORS

FEATURES

- For use with Magtrol TF 300 Series Torque Flange Sensors (Models TF 309 ... TF 317)
- Compensation for axial, angular and radial misalignments
- Torsionally stiff
- Wear and maintenance-free
- Double-element
- Compact design
- High speed (up to 25 000 rpm)
- Minimization of reaction forces
- G 2.5 Balancing according to ISO 1940
- Stainless steel



Fig. 1: KTF-25-28 | Coupling for Torque Flange Sensors TF 315

INFORMATION

Customer side flange is not included, but can be supplied on request.

Couplings size 17 to 110 are delivered with shipping / mounting bolts, which must be removed after installation.

TECHNICAL FEATURES

MODEL	TORQUE FLANGE SENSOR	NOMINAL COUPLING TORQUE [a]	MAX. COUPLING TORQUE [a]	MAX. COUPLING SPEED [a] [b]	MISALIGNMENT			TORSIONAL STIFFNESS	MOMENT OF INERTIA	WEIGHT
					AXIAL	RADIAL	ANGULAR			
		N·m	N·m	rpm	mm	mm	°	N·m / rad	kg·m²	kg
KTF-25-2.8	TF 309-311	280	500	25 000	±2.0	±0.38	0.75° per disk pack	0.055 x 10^6	0.003	2.16
KTF-25-4.5	TF 312	450	800		±2.4	±0.42		0.08 x 10^6	0.006	3.55
KTF-25-17	TF 313-314	1 700	3 150	15 000	±3.0	±0.42		0.65 x 10^6	0.018	5.39
KTF-25-28	TF 315	2 800	5 000		±3.2	±0.45		1.10 x 10^6	0.032	7.20
KTF-25-64	TF 316	6 400	12 500	10 000	±4.2	±0.65		2.31 x 10^6	0.136	17.60
KTF-25-110	TF 317	11 000	20 000		±5.0	±0.76		3.26 x 10^6	0.251	26.00

a) This values only refers to the coupling and not to the TF 300 Torque Flange Sensor. Please refer to the corresponding datasheet

b) Versions with a higher speed range available on request

©2024 MAGTROL | Due to continual product development, Magtrol reserves the right to modify specifications without forewarning.

KTF-25-2.8 DIMENSIONS (FOR TF 309 - TF 311)

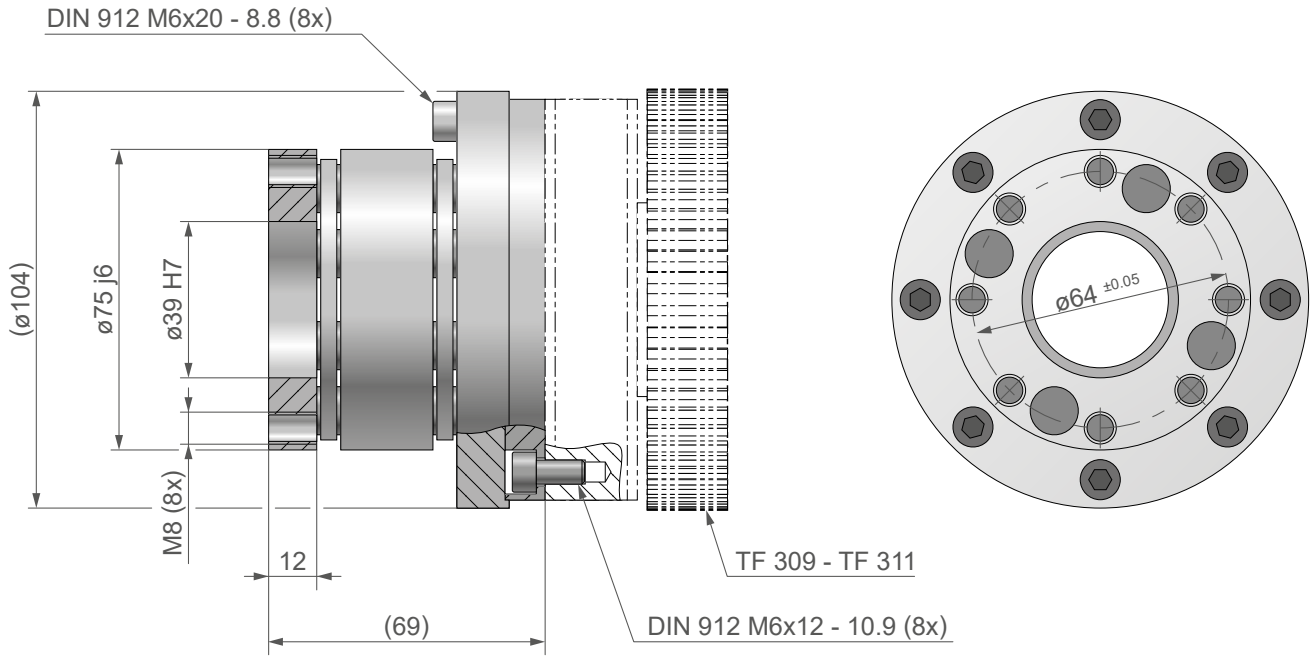

KTF-25-4.5 DIMENSIONS (FOR TF 312)

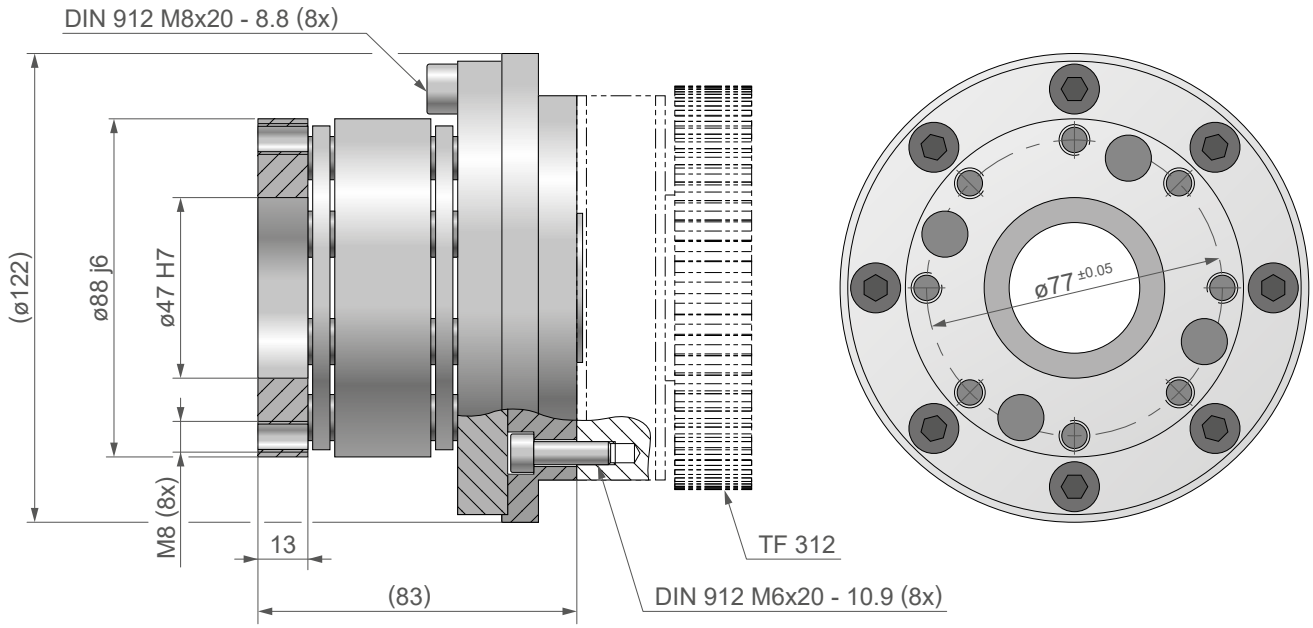

NOTE : 3D STEP files of most of our products are available on our website: www.magtrol.com ; other files are available on request.

©2024 MAGTROL | Due to continual product development, Magtrol reserves the right to modify specifications without forewarning.

KTF-25-17 - 110 DIMENSIONS (FOR TF 313 - TF 317)

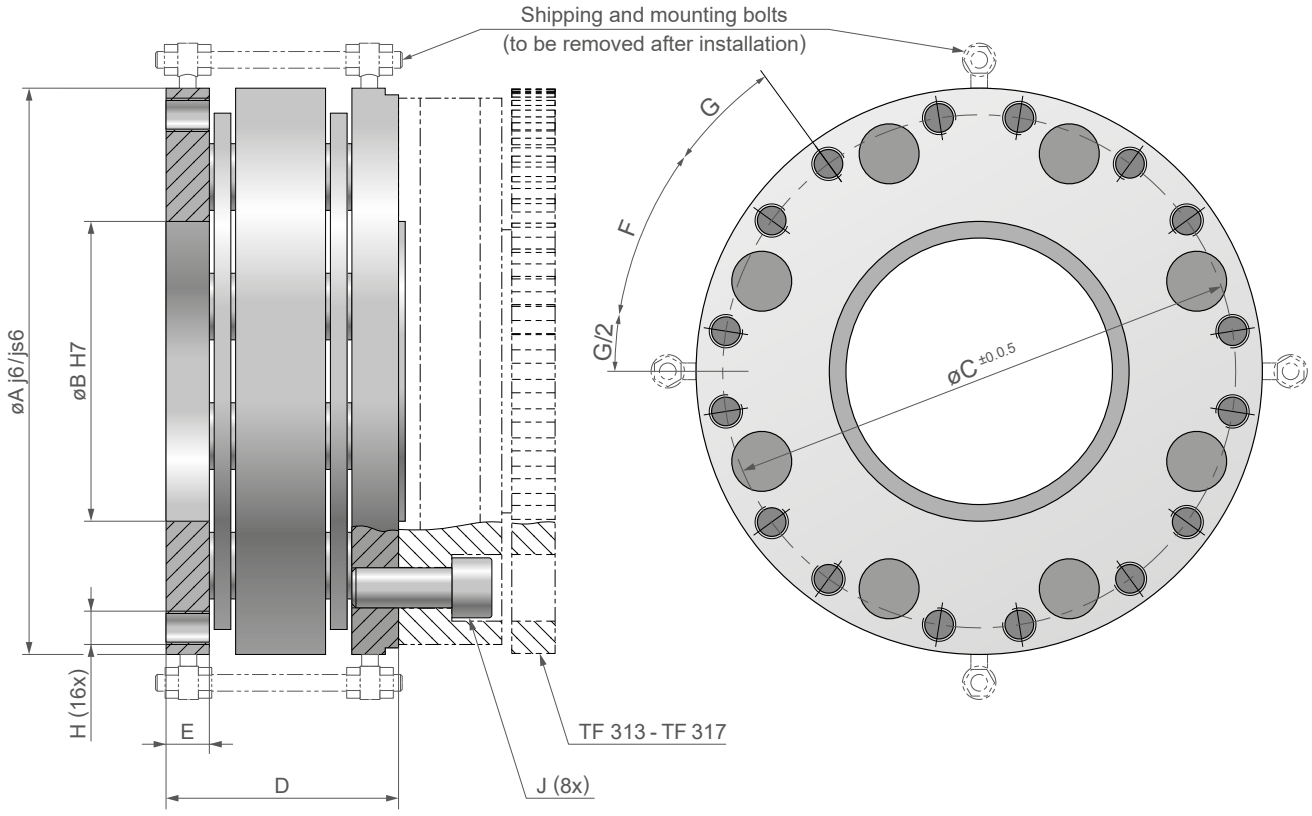

NOTE: All values are in metric units. Dimensions are in millimeters.

MODEL	øA	øB	øC	D	E	F	G	H	J
KTF-25-17	ø146 j6	ø82 H7	ø134	74.8	12.5	27°	18°	M8 (16x)	DIN 912 M10x25 - 10.9 (8x)
KTF-25-28	ø170 js6	ø90 H7	ø154	69.8	13.0	27°	18°	M10 (16x)	DIN 912 M12x25 - 10.9 (8x)
KTF-25-64	ø222 j6	ø118 H7	ø200	99.8	19.1	30°	15°	M16 (16x)	DIN 912 M14x35 - 10.9 (8x)
KTF-25-110	ø248 js6	ø135 H7	ø224	116.0	22.8	30°	15°	M16 (16x)	DIN 912 M16x40 - 10.9 (8x)

NOTE: 3D STEP files of most of our products are available on our website: www.magtrol.com ; other files are available on request.

ORDERING INFORMATION

ORDERING NUMBER	KTF - 25 -	_ _ _

2.8 : for TF 309 - TF 311
4.5 : for TF 312
17 : for TF 313
28 : for TF 315
64 : for TF 316
110 : for TF 317

Example: Coupling for a TF 312 torque flange sensor would be ordered as follows: **KTF-25-4.5**

©2024 MAGTROL | Due to continual product development, Magtrol reserves the right to modify specifications without forewarning.

MAGTROL INC
70 Gardenville Parkway
Buffalo NY 14224 | USA
phone +1 716 668 5555
fax +1 716 668 8705
e-mail magtrol@magtrol.com

MAGTROL SA
Route de Montena 77
1728 Rossens | Switzerland
phone +41 26 407 30 00
fax +41 26 407 30 01
e-mail magtrol@magtrol.ch

Offices in: Germany
France - China - India
Worldwide Distribution Network

ISO 9001 BUREAU VERITAS Certification