TAB SERIES
DYNAMOMETER TABLES

FEATURES

- **Easy Mobility:** Casters, which incorporate a high-grade nylon wheel with a die-cast aluminum frame, provide 360° rotation
- **Sturdy Construction:** Made from extruded aluminum, the dynamometer table is lightweight, strong and corrosion-resistant
- **Leveling Jacks:** When at rest and in operation, hand-operated leveling jacks, with rubber pads for vibration control, lift the casters from the floor to provide a solid foundation
- **Versatile:** Its industry accepted T-slot extrusions accommodate standard fractional or metric fasteners allowing easy reconfiguration
- **Blower Mounting:** To accommodate blowers required for brake cooling of certain HD/ED Dynamometers, tables are drilled and tapped for convenient blower mounting underneath the table top.
- **Built-in Shelf:** For calibration beam, tools and accessories. Also used for mounting of TSC 401 Torque-Speed Conditioner and DES 31X Power Supply (for tables ordered with WB/PB Series Dynamometers).

DESCRIPTION

Test from a stationary position or move a dynamometer to alternate testing stations with ease with Magtrol's Dynamometer Table. The stand is designed from lightweight aluminum with casters for smooth mobility, and is sturdy enough to support even the heaviest of Magtrol dynamometers. The design can be retrofitted to any Magtrol dynamometer and is easily reconfigured for added versatility.

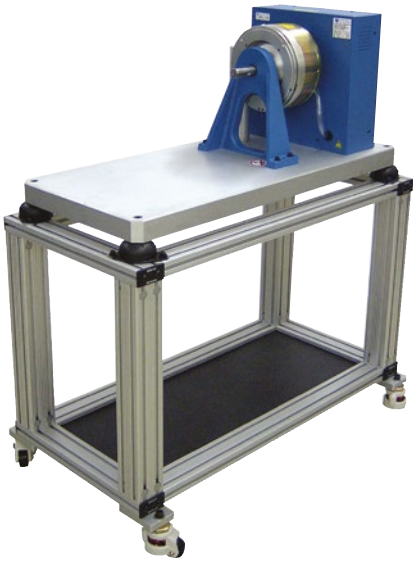

Fig. 1: TAB 0800L basic table with dynamometer base plate also serving as table top

CUSTOM TABLE OPTIONS

- 19" Rack Mounts: Can be added for dynamometer controllers, readouts, power analyzers and other supporting electronics
- Table Height: Choose from 2 different working heights to allow testing from either a standing or seated position
- Locking Drawer: Ideal for a laptop computer
- Built-in Cabinet: For storage of tools and accessories
- Multiple Dynamometers: Up to 3 sets of mounting holes can be drilled and tapped to accommodate up to 3 dynamometers, depending on the model
- Fixtures and Protective Covers: Can be added to any basic table at an additional cost. Some assembly required.



©2026 MAGTROL | Due to continual product development, Magtrol reserves the right to modify specifications without forewarning.

MODEL COMPARISON

TABLES FOR HD/ED DYNAMOMETERS

TAB 1457S	TAB 1457L	TAB 0800L	TAB 0825L
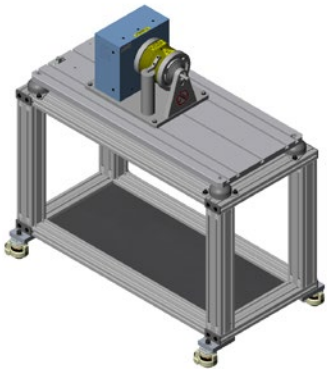	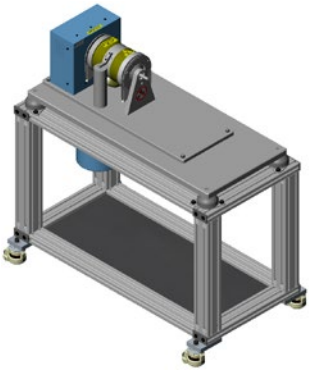	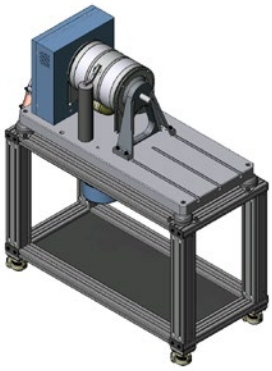	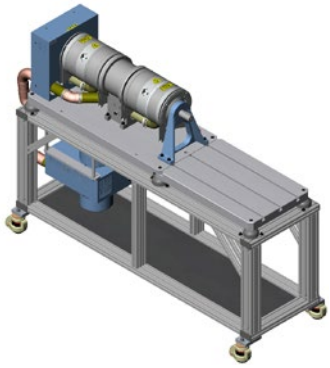
For HD-100, 400, 500 and 700 Series Dynamometers with short base plate and ED-715 Dynamometers [a]	For HD-100, 400, 500 and 700 Series Dynamometers with long base plate	For HD-800 Series Dynamometers with long base plate and ED-815 Dynamometers [a]	For HD-825 Dynamometers with long base plate
Grooved table top with five 10 mm T-slots: one centered, two 250 mm apart and two 350 mm apart.	Mounting holes are pre-drilled and tapped.	Base of dynamometer also serves as the table top.	Grooved table top with three 12 mm T-slots: one centered and two 250 mm apart.
For tables ordered with HD-710 and HD-715 Dynamometers, blowers will be shipped mounted to the table. [b] Blower mouting hardware kit sold seperately	For tables ordered with HD-710 and HD-715 Dynamometers, blowers will be shipped mounted to the table (as shown). [b] Blower mouting hardware kit sold seperately.	For tables ordered with HD-810 and ED/HD-815 Dynamometers, a blower mounting hardware kit will need to be purchased if under-the-table mounting (as shown) is desired. Assembly required.	For tables ordered with HD-825 Dynamometers, a blower mounting hardware kit will need to be purchased if under-the-table mounting (as shown) is desired. Assembly required.

a) **Mounting of ED Engine Dynamometers to dynamometer tables requires certain modifications. Contact Magtrol for details.**

b) **If table is NOT ordered at the same time as the dynamometer, a blower mounting hardware kit may be purchased.**

TABLES FOR WB/PB DYNAMOMETERS

TAB 0043	TAB 0065/0115	TAB 0015
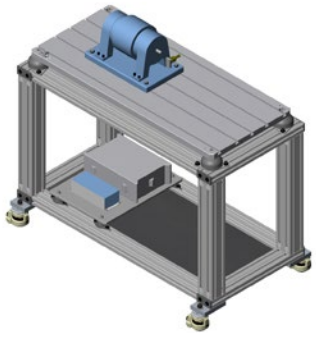	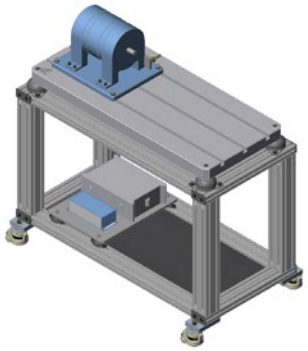	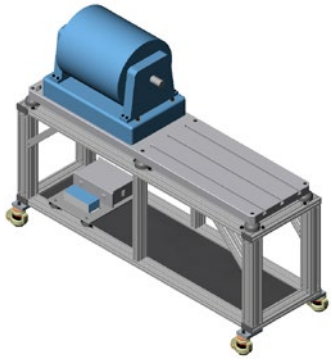
For WB/PB 43 Series Dynamometers	For WB/PB 65 Series and WB/PB 115 Dynamometers	For 1 & 2 WB/PB 15 Series Dynamometers
Grooved table top with five 10 mm T-slots: one centered, two 160 mm apart and two 350 mm apart.	Grooved table top with three 12 mm T-slots: one centered and two 250 mm apart.	Grooved table top with three 14 mm T-slots: one centered and two 250 mm apart.

The TSC 401 Torque-Speed Conditioner and DES 31X Power Supply are shown mounted to a vibration-isolated plate which is bolted to the bottom shelf.

NOTE: Table delivered from Magtrol SA Switzerland may be slightly different in dimensions and design. Please contact your sales representative for specific details.

©2026 MAGTROL | Due to continual product development, Magtrol reserves the right to modify specifications without forewarning.

DIMENSIONS

MODEL	WIDTH [in]	WIDTH [mm]	LENGTH [in]	WIDTH [mm]	HEIGHT [in]	HEIGHT [mm]
TAB 1457S	20	508	41	1041	31	787
TAB 1457L	20	508	41	1041	31	787
TAB 0800L	20	508	41	1041	32	813
TAB 0825L	20	508	67	1702	33	838
TAB 0043	20	508	41	1041	31	787
TAB 0065/0115	20	508	41	1041	32	813
TAB 0015	20	508	67	1702	33	838

©2026 MAGTROL | Due to continual product development, Magtrol reserves the right to modify specifications without forewarning.

MAGTROL INC
70 Gardenville Parkway
Buffalo NY 14224 | USA
phone +1 716 668 5555
fax +1 716 668 8705
e-mail magtrol@magtrol.com

MAGTROL SA
Route de Montena 77
1728 Rossens | Switzerland
phone +41 26 407 30 00
fax +41 26 407 30 01
e-mail magtrol@magtrol.ch

Offices in: Germany
France - China - India
Worldwide Distribution Network

ISO 9001 BUREAU VERITAS Certification