Q.bloxx A102

Universal Measurement Module with Analog Output

Q.bloxx is the ideal DAQ solution for widely distributed installations, electrical panels, and environmental enclosures. Q.bloxx measurement modules provide integrated signal conditioning and arithmetic functions, packaged in modular, DIN Rail mountable enclosures that easily snap together for quick system expansion. Flexibility in distribution allows for highly synchronized data that is less prone to noise due to shorter sensor cable runs to the actual point of measurement.

- RS 485 fieldbus interface up to 24 Mbps: LocalBus up to 115.2 kbps: Modbus-RTU, ASCII
- Connectable to any Controller, e.g. Q.station, Q.gate or Q.pac
- Electromagnetic Compatibility according to EN61000-4 and EN55011
- Power supply 10 ... 30 VDC
- DIN rail mounting (EN60715)



Key Features

- **1 Analog input channel**
  Measuring half and full bridge, IEPE-sensor, voltage, current, quarter bridge with completion terminal
- **1 Analog output channel**
  Voltage (±10 V) or current (0 - 20 mA), 100 kHz update rate
- **High-accuracy digitization**
  19-bit SAR ADC, 100 kHz sample rate
- **4 Digital inputs and 2 digital outputs**
  Status, trigger, tare, alarm, command
- **Signal conditioning**
  32 virtual channels, linearization, digital filter, average, scaling, min/max storage, RMS, arithmetic, alarm
- **3-Way galvanic isolation**
  Channel to channel, channel to power supply, and bank

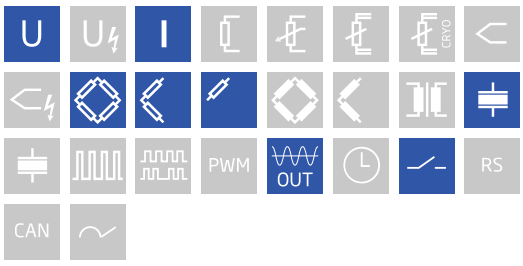



Q.bloxx A102

Universal Measurement Module with Analog Output

Block diagram

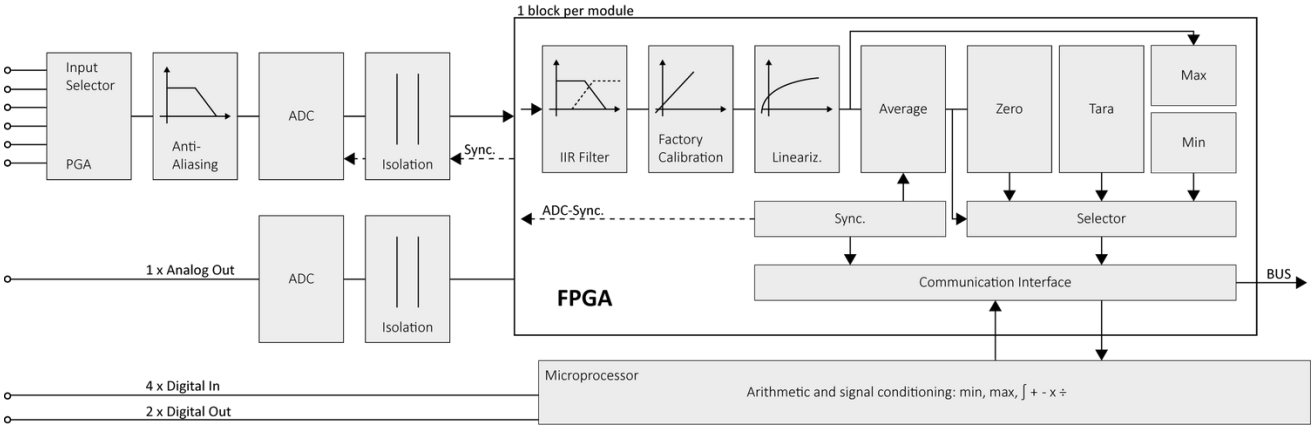

Technical Data

Terminal assignment 10pole screw

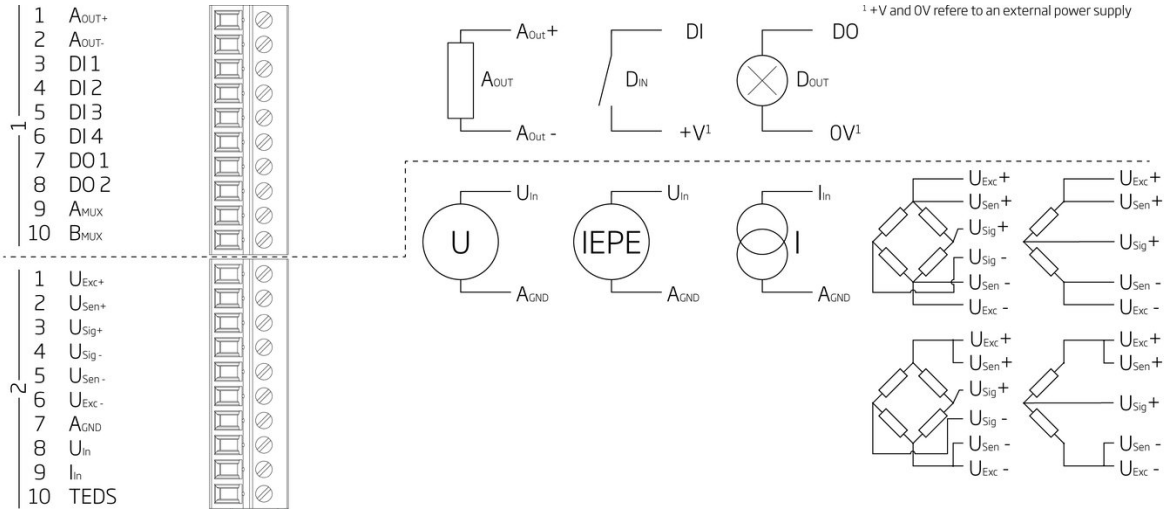

Analog Input

Channels	1
Isolation voltage	500 VDC channel to channel to power supply channel to bus[1]

1 noise pulses up to 1000 VDC, continuous up to 250 VDC

Q.bloxx A102

Universal Measurement Module with Analog Output

Voltage Measurement

Range	±10 V	±1 V	±100 mV
Accuracy	±2 mV	±200 µV	±20 µV
Resolution	40 µV	4 µV	0.4 µV

Input impedance	1 MΩ	> 10 MΩ
Temperature influence offset drift	< 50 µV / 10 K	
Temperature influence gain drift	< 0.02 % / 10 K	
Signal-to-noise ratio	> 90 dB at 1 kHz	
	> 120 dB at 1 Hz	
Long-term stability	< 10 µV / 24 h	
	< 100 µV / 8000 h	

Measurement Mode Current

Range	±25 mA
Accuracy	±6 µA
Resolution	100 nA

Internal shunt resistor	50 Ω
Temperature influence offset drift	< 50 µV / 10 K
Temperature influence gain drift	< 0.02 % / 10 K
Long-term stability	< 0.5 µA / 24 h
	< 5 µA / 8000 h

Measurement Mode Bridge

Bridge configuration(s)	Half- and full-bridge, (5-/6-wire), quarter-bridge with completion terminal, (3-wire)			
Accuracy class	0.05			
Internal shunt resistor resistance	100 kΩ			
Bridge excitation (nominal)	10.0 VDC	5.0 VDC	2.5 VDC	1.0 VDC
Permitted Bridge resistance	> 300 Ω	> 100 Ω	> 80 Ω	> 50 Ω
Measurement range	±100 mV / V	±200 mV / V	±500 mV / V	±1000 mV / V
	±25 mV / V	±50 mV / V	±100 mV / V	±200 mV / V
	±2.5 mV / V	±5 mV / V	±10 mV / V	±20mV / V
	±1 mV / V	±2.5 mV / V	±5 mV / V	±10 mV / V
Temperature influence	offset drift (range 2.5 mV / V)		gain drift	
	< 0.2 µV / V / 10 K		< 0.05 % / 10 K	

Q.bloxx A102

Universal Measurement Module with Analog Output

Measurement Mode IEPE Sensor

Error	Range	Accuracy	Resolution
	±10 V	±10 mV	40 µV
Supply	Constant current 4 mA		
Input frequency	2 Hz		
Limit frequency	10 kHz		
Temperature influence	offset drift	gain drift	
	< 10 µV / 10 K	< 0.025 % / 10 K	

Analog to Digital Conversion

Resolution	19-bit
Update rate	100 kHz
Modulation method	SAR (successive approximation)
Anti-aliasing filter	20 kHz, 3rd order
Digital filters	Infinite impulse response (IIR), low-pass, high-pass, band-pass, Butterworth or Bessel (2nd, 4th, 6th or 8th order), frequency range 1 Hz to 10 kHz (adjustable via software)
Averaging	Configurable or automatic according to the user-defined data rate

Analog Output

Accuracy	0.02 %	
Output type	Configurable: voltage or current	
DAC Resolution	16-bit	
Update rate	100 kHz	
Voltage output	±10 VDC	
Permitted load resistance	> 2 kΩ	
Temperature influence	offset drift	< 2 mV /10 K
	gain drift	< 0.05 % / 10 K
Noise voltage	< 10 mV at 1 kHz	< 2 mV / 10 Hz
Long-term drift	< 1 mV / 24 h	< 2,5 mV / 8000 h
Current output	0 to 20 mA	
Permitted load burden	< 400 Ω	
Burden influence	Accuracy at 100 Ω	±4 µA
	gain drift	< 0.25 µA / Ω
Temperature influence	offset drift	4 µA / 10 K
	gain drift	0.05 % / 10 K
Noise current	< 20 µA at 1 kHz	< 4 µA / 10 Hz
Long-term drift	< 2 µA / 24 h	< 5 µA / 8000 h

Communication Interface

Protocols	proprietary Localbus (115200 bps to 24 Mbps, latency < 100 ns) ASCII (19200 bps to 115200 bps) Modbus RTU Profibus-DP (19200 bps to 12 Mbps) (special firmware required)
Data format	8E1
Electrical standard	ANSI/TIA/EIA-485-A, 2-wire

Q.bloxx A102

Universal Measurement Module with Analog Output

Power Supply

Input voltage	10 to 30 VDC, overvoltage and overcurrent protection
Power consumption	typ. 2.5 W[1]
Input voltage influence	< 0.001 % / V

1 For the exact power consumption values, refer to the calibration report of the respective module

Enviromental

Operating temperature	-20 °C to +60 °C
Storage temperature	-40 °C to +85 °C
Relative humidity	5 % to 95 % at 50 °C, non-condensing

Remarks

Are subject to a warm-up period of at least 45 minutes
In a controlled electromagnetic environment[1]
With configuration: Low-pass 10Hz[2]
Specifications subject to change without notice

1 according to IEC 61326-1:2020
2 unless otherwise stated

Mechanical information

Material	Aluminium and ABS
Measurements (W x H x D)	27 x 120 x 105 mm
Weight	approx. 200 g

Ordering Information

Article number	762179
Accessories	Terminal B4/120-A102, article number 894185
	Terminal B4/350-A102, article number 894286

Gantner Instruments

Austria | Germany | France | Sweden | India | USA | China | Singapore
Montafonerstraße 4 · A-6780 Schruns · T +43 55 56 · 77 463-0

office@gantner-instruments.com
www.gantner-instruments.com