Screwing simulator
Type VSV1

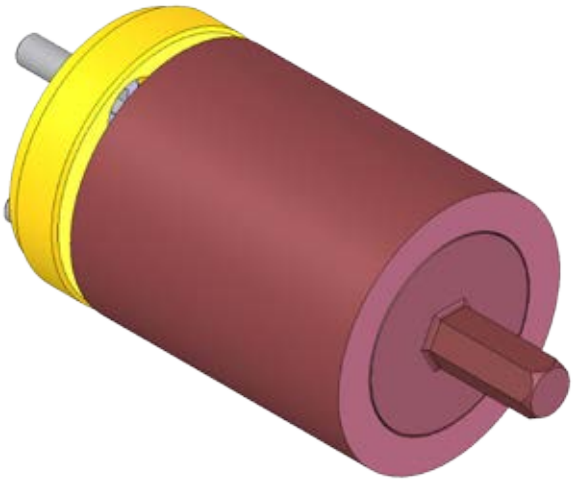

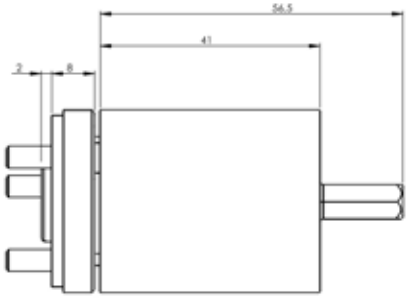

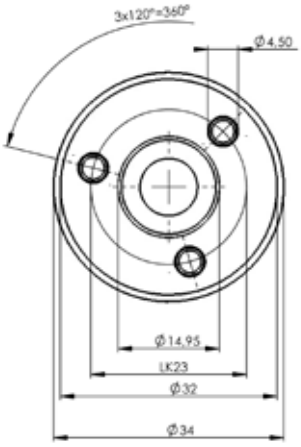

Adjusting and checking of the switch-off-torque of electric and pneumatic screw drivers

Screwing simulator with 1/4" hexagonal drive to be used in cooperation with the torque transducer DRT1.
It can be assembled to the DRT1 fix with a flange. Various torque ranges and angle values are possible by using different spring packages and spacer disks.

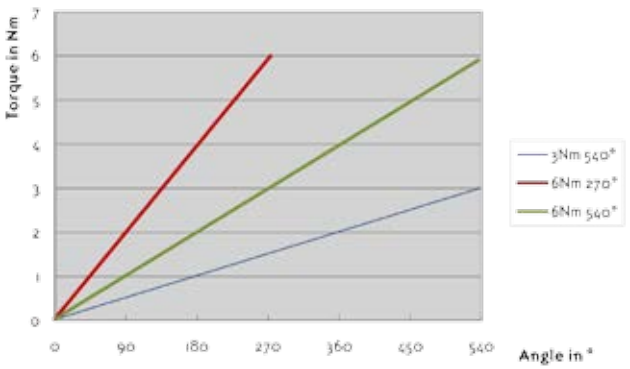

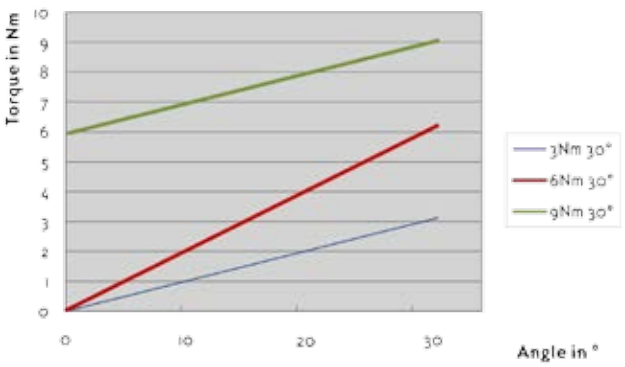

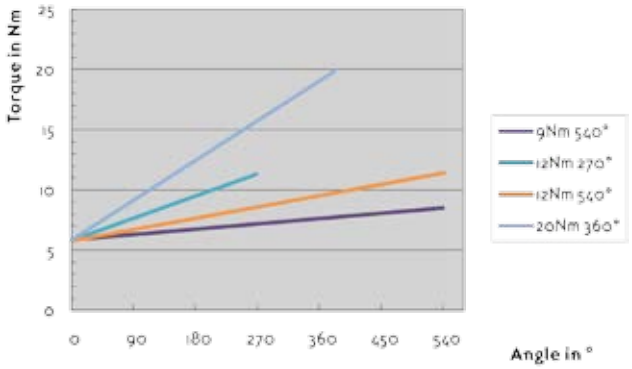

Ordering example: VSV1-12-540

Torque range: 12Nm, Angle: 540°