Screwing simulator
Type VS-H
for electric or pneumatic switching-off tools

Simply hold on to the automatic screw driver



Even suitable for manual operated tools

Desciption:

Using the screwing simulator type VS-H it possible to simulate on a quick and easy manner soft screwing cases as well as hard screwing cases with an automatic screw driver. On this way the power range of a tool can be checked and a surveillance of the devices during the manufacturing process can be done. In combination with an evaluation device the detected torque values can be shown and documented.

The difference in the values of switching-off and stalling the screw driver on soft and hard screwing cases as well as the deviation with the particular screwing case gives a statement about the quality of screw driver.

Mechanical Dimensions:

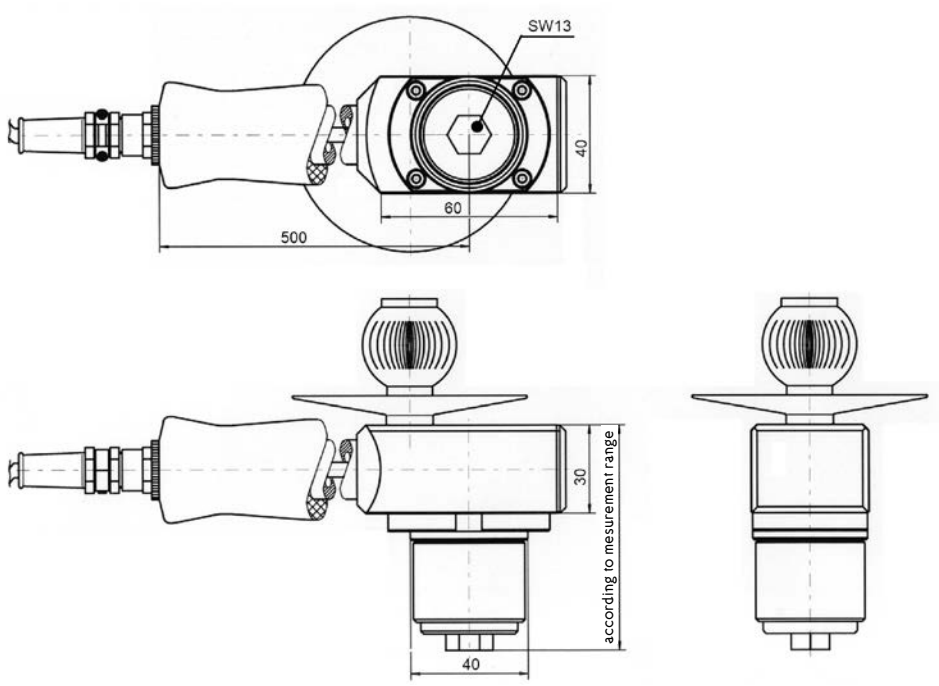

Technical Specifications:

Type:	(a)ctive	(p)assive
Measurement range:	20 Nm (other measurement ranges on demand)	
Supply voltage:	12V DC+-10%	12 V max.
current consumption:	approx. 20 mA	35 mA max.
Voltage output:	0- ±5V an ≤ 1M Ω	2 mV/V
Nonlinearity:	<0,3 %	<0,15 %
Hysteresis:	<0,1 %	<0,1 %
Deviation at zero point:	≤ ± 100 mV	≤ ± 0,01 mV/V
Internal resistance:	---	350 Ω nominal
Compensated temp. range:	5-45°C	5-45°C
Working temperature:	0-60°C	0-60°C
Temperature fault		
Zero point:	0,02 % / K	0,02 % / K
Sensitivity:	0,01 % / K	0,01 % / K
Mechanical overload:	50%	50%
Weight:	approx. 0,95 Kg	approx. 0,95 Kg
Connection:	12pin fitted connector	6pin fitted connector
Protection:	IP 40 according to DIN 40050	IP 40 according to DIN 40050

1. Ordering example: VS-H-p-20
Screwing simulator passive 20 Nm

2. Ordering example: VS-H-a-20-A
Screwing simulator aktive 20Nm Pin connection for GMV2
Caution: For Evaluation device GMV1 order without Index „A“!

available accessories: Evaluation devices, Printer