tel. +49 (0) 79 72 93 10-0
hagstrasse 10 . D-74417 gschwend
sales@eth-messtechnik.de

Datasheet

Torque limiter

with clamping hub, plug-in

SK5

0.1 Nm up to 850 Nm | Torsionally stiff and easy to mount



Properties

- Easy to assemble & disassemble
- Electrically & thermally insulating
- Torque continuously adjustable

Material

- **Bellows:** high grade stainless steel
- **Clutch system:** hardened steel
- **Clamping hubs:** up to size 80 aluminum, size 150 and up steel
- **Tapered male segment:** high strength plastic

Design

Two clamping hubs with one clamping screw each, and one of the clamping hubs with tapered male segment for plug-in installation.
Clutch system: spring loaded ball-detent principle.
Operable temperature range from -30 to +100˚ C.

Available function systems

- W = Single position / automatic re-engagement (standard)
- D = Multi-position / automatic re-engagement
- G = Load holding / load blocking
- F = Full disengagement / manual re-engagement

Product dimensions SK5

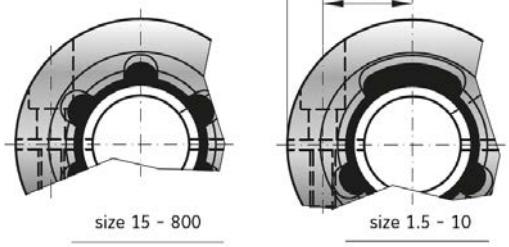

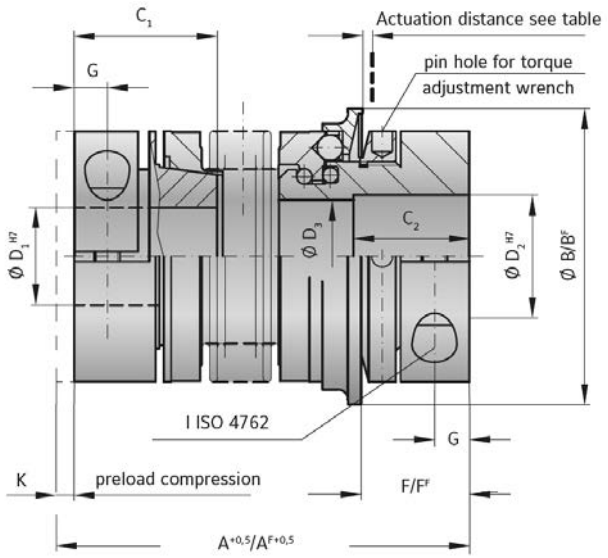

Size			1.5	2	4.5	10	15	30	60	80	150	300	500	800
Adjustment range (approx.)	[Nm]	T_{KN}	0.1 - 0.6 0.4 - 1 0.8 - 1.5	0.2 - 1.5 0.5 - 2	1 - 3 3 - 6	2 - 6 4 - 12	5 - 10 8 - 20	10 - 25 20 - 40	10 - 30 25 - 80	20 - 70 30 - 90	20 - 70 45 - 150	100 - 200 150 - 240 200 - 320	80 - 200 200 - 350 300 - 500	400 - 650 500 - 800 650 - 850
Adjustment range (approx.) "F" version	[Nm]	T_{KN}	0.3 - 0.8 0.6 - 1.3	0.2 - 1 0.7 - 2	2.5 - 4.5	2 - 5 5 - 10	7 - 15	8 - 20 16 - 30	20 - 40 30 - 60	20 - 60 40 - 80	80 - 150	120 - 200 160 - 300	60 - 150 100 - 300 250 - 500	200 - 400 450 - 800
Overall length	[mm]	A	44	48 | 54	60 | 68	70 | 79	76 | 83	89 | 97	105 | 115	115 | 127	116 | 128	143 | 157	166 | 180	196
Overall length "F" version	[mm]	A^F	44	48 | 54	60 | 68	70 | 79	76 | 83	89 | 97	105 | 115	117 | 129	118 | 130	146 | 160	170 | 188	207
Actuation ring Ø	[mm]	B	23	29	35	45	55	65	73	92	92	120	135	152
Actuation ring Ø "F" version	[mm]	B^F	24	32	42	51.5	62	70	83	98	98	132	155	177
Clamping fit length	[mm]	C_1	14	16	19	21	28	33	39	43	43	52	61	74
Clamping fit length	[mm]	C_2	11	13	16	16	22	27	31	35	35	42	52	48
Bore-Ø	[mm]	D_1	3 - 8*	4 - 12*	5 - 16*	5 - 20*	8 - 22*	10 - 25*	12 - 32	14 - 38*	14 - 38*	30 - 56	35 - 60	40 - 62*
Bore-Ø	[mm]	D_2	3 - 8*	4 - 12*	5 - 14*	5 - 20*	8 - 26	10 - 30	12 - 32	14 - 42	14 - 42	30 - 60	35 - 60	40 - 75
Inner-Ø	[mm]	D_3	9.1	12.1	14.1	20.1	21.1	24.1	32.1	36.1	36.1	58.1	60.1	60.1
Outer-Ø Coupling	[mm]	E	19	25	32	40	49	55	66	81	81	110	123	134
Distance	[mm]	F	12	13	15	17	19	24	28	31	31	35	45	50
Distance "F" Version	[mm]	F_F	11.5	12	14	16	19	22	29	31	30	36	43	54
Distance	[mm]	G	3.5	4	5	5	6.5	7.5	9.5	11	11	13	17	18
Center distance	[mm]	H	6	8	10	15	17	19	23	27	27	39	41	2x48
Screw ISO 4762		I	M2.5	M3	M4	M4	M5	M6	M8	M10	M10	M12	M16	2xM16
Tightening torque	[Nm]		1	2	4	4.5	8	15	40	50	70	130	200	250
Pretensioning. (approx.)	[mm]	K	0.1 - 0.5	0.2 - 0.7	0.2 - 0.7	0.2 - 1	0.21	0.3 - 1.5	0.5 - 1.5	0.5 - 1	0.5 - 1	0.5 - 1.5	0.5 - 2	0.8 - 2
Axial recovery of coupling max.	[N]		4	8 | 5	15 | 10	25 | 30	20 | 12	50 | 30	70 | 45	48 | 32	82 | 52	157 | 106	140 | 96	200
Weight (approx.)	[kg]		0.038	0.07	0.2	0.3	0.4	0.6	1.4	2	2.4	5.9	9.6	15
Moment of Inertia	10^{-3} [kgm^2]	J_{ges}	0.01	0.01 | 0.01	0.02 | 0.02	0.06 | 0.07	0.1 | 0.15	0.27 | 0.32	0.75 | 0.8	1.8 | 1.9	2.5 | 2.8	6.5 | 7	13 | 17	50
Lateral (max.)	± [mm]		0.15	0.15 | 0.2	0.2 | 0.25	0.2 | 0.3	0.15 | 0.2	0.2 | 0.25	0.2 | 0.25	0.2 | 0.25	0.2 | 0.25	0.25 | 0.3	0.3 | 0.35	0.35
Agular (max.)	± [Grad]		1	1 | 1.5	1.5 | 2	1.5 | 2	1 | 1.5	1 | 1.5	1 | 1.5	1 | 1.5	1 | 1.5	1.5 | 2	2 | 2.5	2.5
Laterale spring stiffness	[N/mm]		70	40 | 30	290 | 45	280 | 145	475 | 137	900 | 270	1200 | 420	920 | 290	1550 | 435	3750 | 1050	2500 | 840	2000
Actuation distance	[mm]		0.7	0.8	0.8	1.2	1.5	1.5	1.7	1.9	1.9	2.2	2.2	2.2

A^F. B^F. L^F = Full disengagement version . * keyway with max. bore diameter onlyconditionally possible.

Order code

Example:	SK5 / 60 / 105 / G / 16 / 19pfn / 25 / 10-30							
	Model	Size	Overall length [mm]	Function system	Bore D_1 [mm] (for keyway attach pfn)	Bore D_2 [mm] (for keyway attach pfn)	Disengagement torque [mm]	Torque adjustment range [mm]

D_1 is generally intended as the bore for the shaft ends of the sensor.