tel. +49 (0) 79 72 93 10-0
hagstrasse 10 . D-74417 gschwend
sales@eth-messtechnik.de

# Datasheet

## Torque limiter

## with cone clamp connection

# *SK3*

## 5 Nm up to 2800 Nm | Torsionally stiff



## Properties

- High clamping forces
- Compensation for misalignments
- Torque continuously adjustable

## Material

- **Bellows:** high grade stainless steel
- **Clutch system:** hardened steel
- **Clamping hubs:** steel

## Design

Two conical clamping assemblies with six tightening screws each, plus jack screws fo removel.
Clutch system: spring loaded ball-detent principle.
Operable temperature range from -30 to +100˚ C.

## Available function systems

- W = Single position / automatic re-engagement (standard)
- D = Multi-position / automatic re-engagement
- G = Load holding / load blocking
- F = Full disengagement / manual re-engagement

## Product dimensions SK3

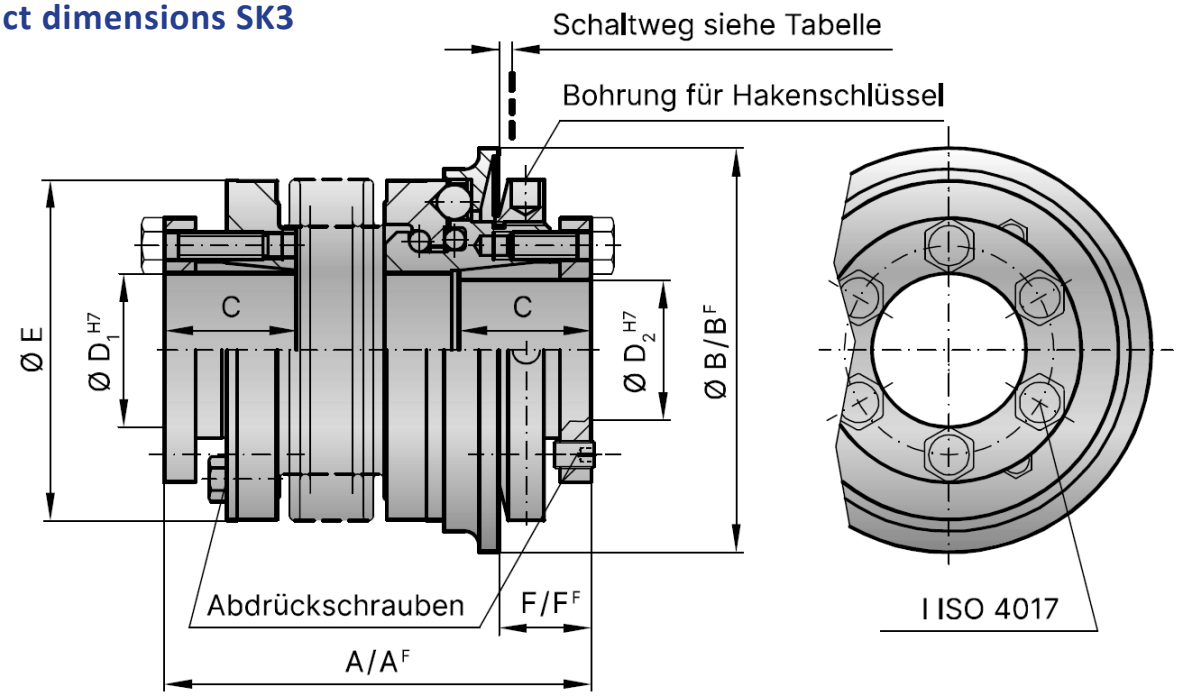


| Size | | | 15 | 30 | 60 | 150 | 200 | 300 | 500 | 800 | 1500 | 2500 |
|---|---|---|---|---|---|---|---|---|---|---|---|---|
| Adjustment range (approx.) | [Nm] | $T_{KN}$ | 5 - 10<br>8 - 20 | 10 - 25<br>20 - 40 | 10 - 30<br>25 - 80 | 20 - 70<br>45 - 150<br>80 - 200 | 30 - 90<br>60 - 160<br>140 - 280 | 100 - 200<br>150 - 240<br>220 - 400 | 80 - 200<br>200 - 350<br>300 - 500 | 400 - 650<br>500 - 800<br>600 - 900 | 650 - 800<br>700 - 1200<br>1000 - 1800 | 1500 - 2000<br>2000 - 2500<br>2300 - 2800 |
| Adjustment range (approx.) “F“ version | [Nm] | $T_{KN}$ | 7 - 15 | 8 - 20<br>16 - 30 | 20 - 40<br>30 - 60 | 20 - 60<br>40 - 80<br>80 - 150 | 80 - 140<br>130 - 200 | 120 - 180<br>160 - 300 | 60 - 150<br>100 - 300<br>250 - 500 | 200 - 400<br>450 - 800 | 1000 - 1250<br>1250 - 1500 | 1400 - 2200<br>1800 - 2700 |
| Overall length ±2 | [mm] | A | 62 \| 69 | 72 \| 80 | 84 \| 94 | 93 \| 105 | 99 \| 111 | 114 \| 128 | 123 \| 136 | 151 | 175 | 246 |
| Overall length ±2 “F“ version | [mm] | $A^F$ | 62 \| 69 | 72 \| 80 | 84 \| 94 | 93 \| 105 | 102 \| 114 | 117 \| 131 | 127 \| 140 | 151 | 184 | 252 |
| Actuation ring Ø | [mm] | B | 55 | 65 | 73 | 92 | 99 | 120 | 135 | 152 | 174 | 243 |
| Actuation ring Ø “F“ version | [mm] | $B^F$ | 62 | 70 | 83 | 98 | 117 | 132 | 155 | 177 | 187 | 258 |
| Clamping fit length | [mm] | C | 19 | 22 | 27 | 32 | 32 | 41 | 41 | 49 | 61 | 80 |
| Bore-Ø | [mm] | $D_1$ / $D_2$ | 10 - 22 | 12 - 23 | 12 - 29 | 15 - 37 | 20 - 44 | 25 - 56 | 25 - 60 | 30 - 60 | 35 - 70 | 50 - 100 |
| Outer-Ø Coupling | [mm] | E | 49 | 55 | 66 | 81 | 90 | 110 | 123 | 133 | 157 | 200 |
| Distance | [mm] | F | 13 | 16 | 18 | 19 | 19 | 23 | 25 | 31 | 30 | 34 |
| Distance “F“ Version | [mm] | $F_F$ | 13 | 14 | 17 | 18 | 17 | 20 | 22 | 20 | 26 | 31 |
| 6x Screw ISO 4017 | | I | M4 | M5 | M5 | M6 | M6 | M8 | M8 | M10 | M12 | M16 |
| Tightening torque | [Nm] | | 4 | 6 | 8 | 12 | 14 | 18 | 25 | 40 | 70 | 120 |
| Weight (approx.) | [kg] | | 0.3 | 0.4 | 1.2 | 2.3 | 3 | 5 | 6.5 | 9 | 16.3 | 35 |
| Moment of Inertia | $10^{-3}$ [kgm²] | $J_{ges}$ | 0.1 \| 0.15 | 0.28 \| 0.3 | 0.75 \| 0.8 | 1.9 \| 2 | 2.8 \| 3 | 5.5 \| 6 | 11 \| 12.8 | 20 | 42 | 257 |
| Lateral (max.) | [mm] | | 0.15 \| 0.2 | 0.2 \| 0.25 | 0.2 \| 0.25 | 0.2 \| 0.25 | 0.25 \| 0.3 | 0.25 \| 0.3 | 0.3 \| 0.35 | 0.35 | 0.35 | 0.35 |
| Agular (max.) | [Grad] | | 1 \| 1.5 | 1 \| 1.5 | 1 \| 1.5 | 1 \| 1.5 | 1.5 \| 2 | 1.5 \| 2 | 2 \| 2.5 | 2.5 | 2.5 | 2.5 |
| Laterale spring stiffness | [N/mm] | | 475 \| 137 | 900 \| 270 | 1200 \| 380 | 1550 \| 435 | 2040 \| 610 | 3750 \| 1050 | 2500 \| 840 | 2000 | 3600 | 6070 |
| Actuation distance | [mm] | | 1.5 | 1.5 | 1.7 | 1.9 | 2.2 | 2.2 | 2.2 | 2.2 | 3 | 3 |

$A^F$, $B^F$, $L^F$ = Full disengagement version  Larger versions available upon request.

## Order code

| Example: | SK3 / 60 / 84 / G / 16 / 19pfn / 25 / 10-30 | | | | | | | |
|---|---|---|---|---|---|---|---|---|
| | Model | Size | Overall length [mm] | Function system | Bore $D_1$ [mm] (for keyway attach pfn) | Bore $D_2$ [mm] (for keyway attach pfn) | Disengagement torque [mm] | Torque adjustment range [mm] |

$D_1$ is generally intended as the bore for the shaft ends of the sensor.