tel. +49 (0) 79 72 93 10-0
hagstrasse 10 . D-74417 gschwend
sales@eth-messtechnik.de

Datasheet

Torque limiter with clamping hub

for direct drives

SK2

0.1 Nm up to 1800 Nm | Torsionally stiff



Properties

- Easy to assemble
- Compensation for misalignments
- Torque continuously adjustable

Design

Two clamping hubs with one clamping screw in each.
Clutch system: spring loaded ball-detent principle.
Operable temperature range from -30 to +100˚ C.

Material

- **Bellows:** high grade stainless steel
- **Clutch system:** hardened steel
- **Clamping hubs:** up to size 80 aluminum, size 150 and up steel

Available function systems

- W = Single position / automatic re-engagement (standard)
- D = Multi-position / automatic re-engagement
- G = Load holding / load blocking
- F = Full disengagement / manual re-engagement

Product dimensions SK2

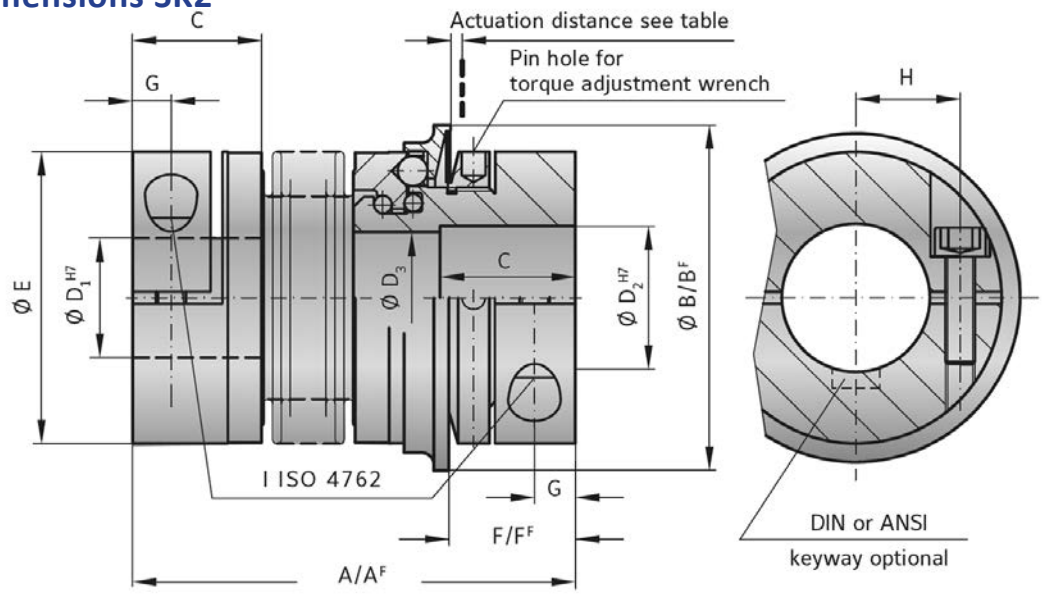

Size			1.5	2	4.5	10	15	30	60	80	150	200	300	500	800	1500
Adjustment range (approx.)	[Nm]	T_{KN}	0.1-0.6 0.4-1 0.8-1.5	0.2-1.5 0.5-2	1-3 3-6	2-6 4-12	5-10 8-20	10-25 20-40	10-30 25-80	20-70 30-90	20-70 45-150 80-180	30-90 60-160 120-240	100-200 150-240 200-320	80-200 200-350 300-500	400-650 500-800 650-850	650-800 700-1200 1000-1800
Adjustment range (approx.) "F" version	[Nm]	T_{KN}	0.3-0.8 0.6-1.3	0.2-1 0.7-2	2.5-4.5	2-5 5-10	7-15	8-20 16-30	20-40 30-60	20-60 40-80	20-60 40-80 80-150	80-140 130-200	120-180 160-300	60-150 100-300 250-500	200-400 450-800	1000-1250 1250-1500
Overall length	[mm]	A	42	46|51	57|65	65|74	75|82	87|95	102|112	115|127	116|128	128|140	139|153	163|177	190	223
Overall length "F" version	[mm]	A^F	42	46|51	57|65	65|74	75|82	87|95	102|112	117|129	118|130	131|143	142|156	167|181	201	232
Actuation ring Ø	[mm]	B	23	29	35	45	55	65	73	92	92	99	120	135	152	174
Actuation ring Ø "F" version	[mm]	B^F	24	32	42	51.5	62	70	83	98	98	117	132	155	177	187
Clamping fit length	[mm]	C	11	13	16	16	22	27	31	35	35	40	42	51	48	67
Bore-Ø	[mm]	D_1/D_2	3-8*	4-12*	5-14*	6-16*	10-26*	12-30	15-32	19-42	19-42	24-45	30-60	35-60	40-75	50-80
Inner-Ø	[mm]	D_3	9.1	12.1	14.1	20.1	21.1	24.1	32.1	36.1	36.1	42.1	58.1	60.1	60.1	68.1
Outer-Ø Coupling	[mm]	E	19	25	32	40	49	55	66	81	81	90	110	123	134	157
Distance	[mm]	F	12	13	15	17	19	24	28	31	31	35	35	45	50	63
Distance "F" Version	[mm]	F_F	11.5	12	14	16	19	22	29	31	30	33	35	43	54	61
Distance	[mm]	G	3.5	4	5	5	6.5	7.5	9.5	11	11	12.5	13	17	18	22.5
Center distance	[mm]	H	6	8	10	15	17	19	23	27	27	31	39	41	2x48	2x55
Screw ISO 4762		I	M2.5	M3	M4	M4	M5	M6	M8	M10	M10	M12	M12	M16	2xM16	2xM20
Tightening torque	[Nm]		1	2	4	4.5	8	15	40	50	70	120	130	200	250	470
Weight (approx.)	[kg]		0.047	0.07	0.2	0.3	0.4	0.6	1	2	2.4	4	5.9	9.6	14	21
Moment of Inertia	10^{-3} [kgm²]	J_{ges}	0.01	0.01|0.01	0.02|0.02	0.06|0.07	0.1|0.15	0.27|0.32	0.75|0.8	1.8|1.9	2.5|2.8	5.1|5.3	11.5|11.8	22.8|23	42	83
Lateral (max.)	± [mm]		0.15	0.15|0.2	0.2|0.25	0.2|0.3	0.15|0.2	0.2|0.25	0.2|0.25	0.2|0.25	0.2|0.25	0.25|0.3	0.25|0.3	0.3|0.35	0.35	0.35
Agular (max.)	± [Grad]		1	1|1.5	1.5|2	1.5|2	1|1.5	1|1.5	1|1,5	1|1.5	1|1.5	1.5|2	1.5|2	2|2.5	2.5	2.5
Laterale spring stiffness	[N/mm]		70	40|30	290|45	280|145	475|137	900|270	1200|420	920|255	1550|435	2040|610	3750|1050	2500|840	2000	3600
Actuation distance	[mm]		0.7	0.8	0.8	1.2	1.5	1.5	1.7	1.9	1.9	2.2	2.2	2.2	2.2	3

A^F, B^F, L^F = Full disengagement version Larger versions available upon request. * keyway with max. bore diameter only in clamping hub possible.

Order code

Example:	SK2 / 10 / 65 / G / 15 / 12pfn / 4 / 2,5-4,5							
	Model	Size	Overall length [mm]	Function system	Bore D_1 [mm] (for keyway attach pfn)	Bore D_2 [mm] (for keyway attach pfn)	Disengagement torque [mm]	Torque adjustment range [mm]

D_1 is generally intended as the bore for the shaft ends of the sensor.