tel. +49 (0) 79 72 93 10-0
hagstrasse 10 . D-74417 gschwend
sales@eth-messtechnik.de

Datasheet

Safety coupling

with metal bellows and collet clamps

KBK/BKK

0,2 Nm up to 500 Nm



Features

- Backlash-free
- With clamp hubs for a fast an easy assembly

Material

- bellows: stainless steel
- hub: up to size 60 aluminium, size 80 and up steel

Temperature range

-30°C up to 250°C

Optional

- VA = Full stainless steel version
- VAW = Laserwelded
- NI = Nickel plated version

Product details KBK/BKK

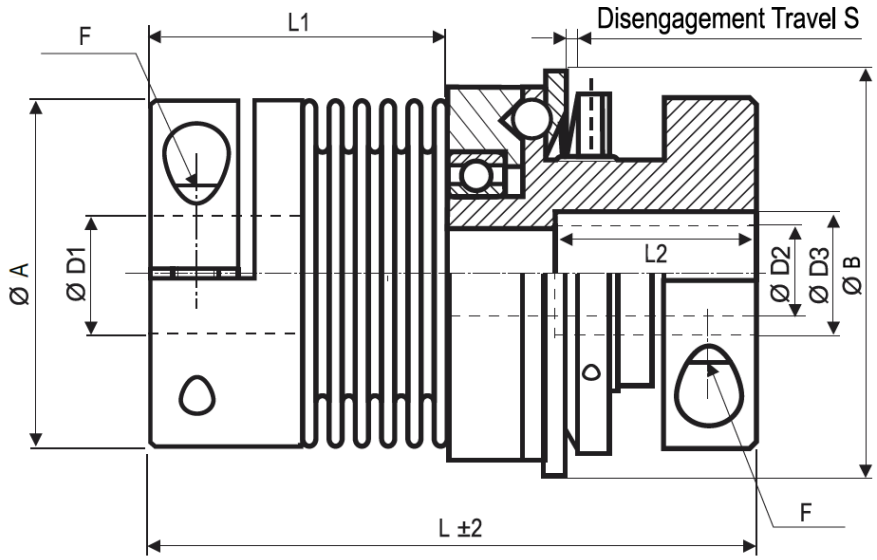

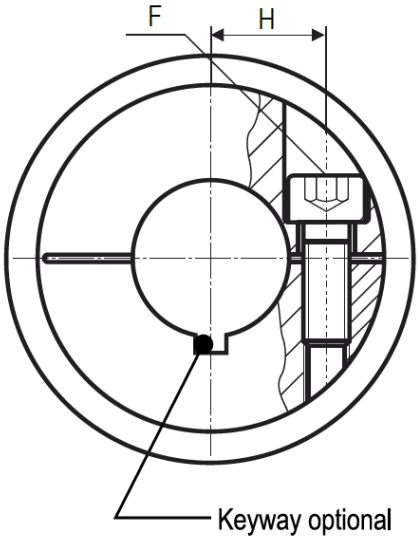

Size			2			4.5		7		10		30		60		80		150		200		300		500	
Torque Range 1	[Nm]		0.2 - 1.5			1 - 3		1 - 4		3 - 7		5 - 15		12 - 35		15 - 40		50 - 130		30 - 90		60 - 200		80 - 250	
Torque range 2	[Nm]		0.5 - 2			3 - 6		3 - 7		5 - 10		10 - 30		20 - 60		30 - 80		65 - 150		80 - 200		150 - 300		200 - 500	
Total length	[mm]	L	46	52	56	57	65	65	75	65	75	85	94	105	115	113	125	113	125	125	138	140	150	158	170
Length	[mm]	L_1	21	27	31	27	36	34	43	34	43	40.5	48.5	50	60	57.5	68.5	57.5	68.5	63	75	67	78	70	81
Bore length**	[mm]	L_2	15			X		20		20		28		38		34		34		X		42		56	
Hub - Ø	[mm]	A	25			32.5		40		40		56		66		82		82		90		110		122	
Outer - Ø	[mm]	B	29			36		49		49		64		79		94		94		109		119		129	
Bore - Ø* (H7)	[mm]	D_1	3 - 14			6 - 16		6 - 25		6 - 25		10 - 32 (30)		12 - 32		14 - 42		19 - 42		22 - 45		30 - 60		35 - 70	
Bore - Ø* (H7)	[mm]	D_2	3 - 8			6 - 13 (9)		6 - 16 (11)		6 - 16 (11)		10 - 20 (14)		12 - 28 (21)		14 - 35 (27)		14 - 35 (27)		22 - 41 (33)		30 - 50 (41)		35 - 56 (46)	
Bore - Ø** (H7)	[mm]	D_3	>8 - 11			X		>16 - 20		>16 -20		>20 - 26		>28 - 31		>35 - 38		>35 - 38		X		>50 - 57		>56 - 62	
Screw ISO 4762		F	M3			M4		M4		M4		M6		M8		M10		M10		M12		M12		M12	
Tightening torque	[Nm]		2			3.5		5.1		5.1		15		36		72		72		125		125		125	
Center distance	[mm]	H	9			12		15.5		15.5		20		23		28		28		31		39		42	
Disengagement travel	[mm]	S	0.7			0.7		0.7		0.7		1.2		1.2		2		2		2		2		2	
Weight	[kg]		0.08			0.16		0.25		0.25		0.77		1.34		3.52		3.52		4.45		6.47		9.22	
Moment of Inertia	[kg x cm²]		0.06			0.26		0.58		0.6		3.2		8.2		31		31		53		97		164	
Spring stiffness torsional	[Nm/rad]		1.5	1.3	1.0	6.5	4.2	8.1	6.8	8.1	6.8	38	28	75	50	128	75	155	105	175	116	502	285	690	320
Spring stiffness radial	[N/mm]		67	21	11	168	41	120	29	120	29	720	225	1150	340	1200	400	2020	595	2500	460	6300	1400	7790	970
Spring stiffness axial	[N/mm]		12	11	9	32	20	27	17	27	17	50	28	90	50	80	50	145	85	147	82	280	145	100	85
Misalignment radial	[mm]		0.15	0.2	0.25	0.1	0.2	0.15	0.3	0.15	0.3	0.15	0.25	0.15	0.25	0.2	0.25	0.2	0.25	0.2	0.25	0.2	0.25	0.2	0.25
Misalignment axial	[mm]		0.3	0.4	0.5	0.3	0.5	0.4	0.6	0.4	0.6	0.6	1	0.6	1	0.5	0.8	0.5	0.8	0.5	0.8	0.5	0.8	0.5	1
Misalignment agular	[°]		1.5	1.5	2	1.5	2	1.5	2	1.5	2	1.5	2	1.5	2	1.5	2	1.5	2	1.5	2	1.5	2	1.5	2
Max. rpm	[min^{-1}]		13,200			12,300		11,690		11,690		9540		8180		6220		6220		5720		5200		4470	

* The maximum possible bore Ø for keyways is in brackets if it is not the largest bore Ø.
** D_3 and L_2 are only for when a hole larger than D2 is needed.

Order code

Example:	KBK/BKK	/ 60	/ 105	/ 16	/ 14pfn	/ 20Nm	/ C	/ 1	/ VA
	Model	Size	Length [mm]	Bore D_1 [mm] (for keyway attach pfn)	Bore D_2 or D_3 [mm] (for keyway attach pfn)	Disengagement torque	Engagement: C = Single Position D = Multi Position	Torque range	Options

D_1 is generally intended as the bore for the shaft ends of the sensor.