tel. +49 (0) 79 72 93 10-0
hagstrasse 10 . D-74417 gschwend
sales@eth-messtechnik.de

Datasheet

Safety coupling

with metal bellows and split hubs

KBK/BHH

3 Nm up to 500 Nm



Features

- Backlash-free
- Radial assembly

Material

- bellows: stainless steel
- hub: aluminium

Temperature range

-30°C up to 250°C

Optional

- VA = Full stainless steel version
- VAW = Laserwelded
- NI = Nickel plated version

Product details KBK/BHH

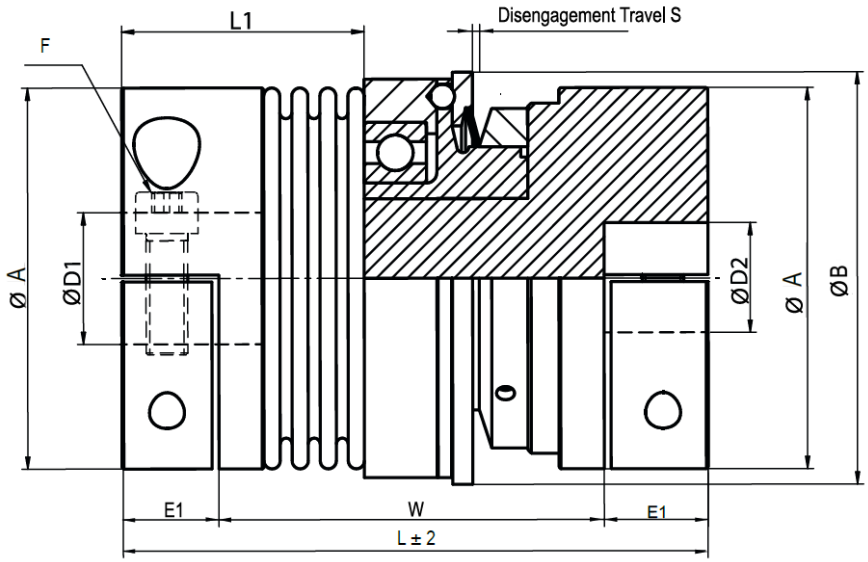

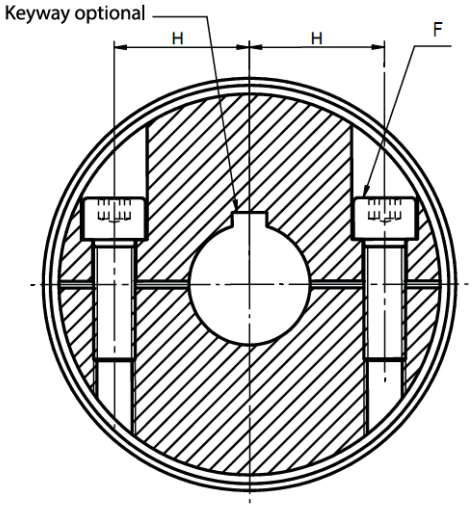

Sizr			10		30		60		80		150		200		300		500	
Torque Range 1	[Nm]		3 - 7		5 - 15		12 - 35		15 - 40		50 - 130		30 - 90		60 - 200		80 - 250	
Torque range 2	[Nm]		5 - 10		10 - 30		20 - 60		30 - 80		65 - 150		80 - 200		150 - 300		200 - 500	
Total length	[mm]	L	72	81	99	107	116	127	136	148	136	148	146	159	171	182	189	200
Length	[mm]	L_1	34	43	42	51	50	60	60	72	60	72	66	78	72	83	81	92
Hub - Ø	[mm]	A	40		56		66		82		82		90		110		122	
Outer - Ø	[mm]	B	49		64		79		94		94		109		119		129	
Bore - Ø* (H7)	[mm]	D_1	6 - 25		10 - 32 (30)		12 - 32		14 - 42		19 - 42		22 - 45		30 - 60		35 - 65	
Bore - Ø* (H7)	[mm]	D_2	6 - 25		10 - 20		12 - 28		14 - 35		14 - 35		22 - 41		30 - 50		35 - 65	
Screw ISO 4762		F	M4		M6		M8		M10		M10		M12		M12		M12	
Tightening torque	[Nm]		5,1		15		36		72		72		125		145		145	
Center distance	[mm]	H	15,5		20		23		28		28		31		39		42	
Disengagement travel	[mm]	S	0,7		1,2		1,2		2		2		2		2		2	
Length of Center section	[mm]	W	54	63	65	73	72	83	86	98	86	98	92	105	112	122	118	130
Weight	[kg]		0,429		0,891		1,523		2,967		2,967		3,611		5,561		9,307	
Moment of Inertia	[kg x cm^2]		1,198		3,957		9,705		26,428		26,428		45,831		92,694		194,726	
Spring stiffness torsional	[Nm/rad]		8,1	6,8	38	28	75	50	128	75	155	105	175	116	502	285	690	320
Spring stiffness radial	[N/mm]		120	29	720	225	1150	340	1200	400	2020	595	2500	460	6300	1400	7790	970
Spring stiffness axial	[N/mm]		27	17	50	28	90	50	80	50	145	85	147	82	280	145	100	85
Misalignment radial	[mm]		0,15	0,3	0,15	0,25	0,15	0,25	0,2	0,25	0,2	0,25	0,2	0,25	0,2	0,25	0,2	0,25
Misalignment axial	[mm]		0,4	0,6	0,6	1	0,6	1	0,5	0,8	0,5	0,8	0,5	0,8	0,5	0,8	0,5	1
Misalignment agular	[°]		1,5	2	1,5	2	1,5	2	1,5	2	1,5	2	1,5	2	1,5	2	1,5	2
Max. rpm	[min^{-1}]		11.690		9540		8180		6220		6220		5720		5200		4470	

* The maximum possible bore Ø for keyways is in brackets if it is not the largest bore Ø.

Order code

Example:	KBK/BHH / 60	/ 114	/ 16	/ 14pfn	/ 20Nm	/ C	/ 1	/ VA
	Model	Size	Length [mm]	Bore D_1 [mm] (for keyway attach pfn)	Bore D_2 or D_3 [mm] (for keyway attach pfn)	Disengagement torque	Engagement: C = Single Position D = Multi Position	Torque range	Options

D_1 is generally intended as the bore for the shaft ends of the sensor.