tel. +49 (0) 79 72 93 10-0
hagstrasse 10 . D-74417 gschwend
sales@eth-messtechnik.de

Datasheet

Miniture metal bellows coupling

axial pluggable, with collet clamps

KB4P

18 Nm up to 500 Nm



Features

- Backlash-free
- Easy assembly / disassembly by simply plugging / pulling the coupling parts
- High tensile aluminum and special coatings ensure a durable solution at low mass / inertia
- High torsional stiffness, compensation of shaft misalignment at low restoring forces

Material

- Bellows: stainless steel
- Hub: aluminium

Temperature range

-30°C up to 120°C

Optional

- VA = Full stainless steel version
- VAW = Laserwelded

Plug system

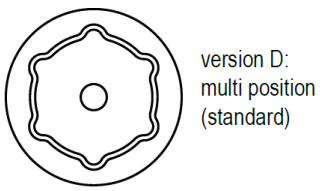

version D:
multi position
(standard)

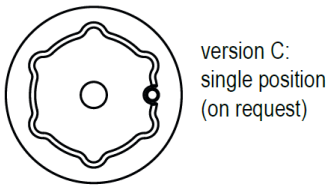

version C:
single position
(on request)

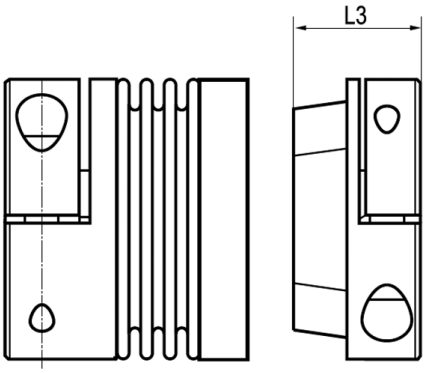

Product details KB4P

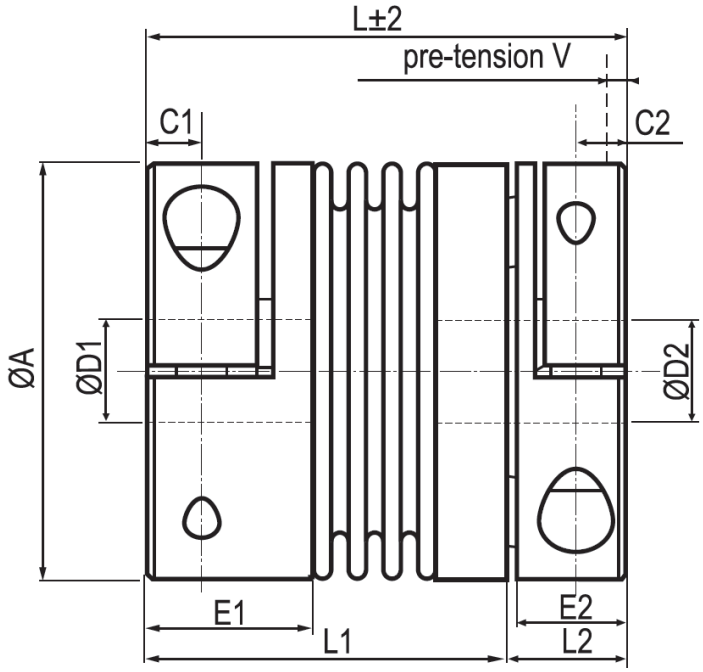

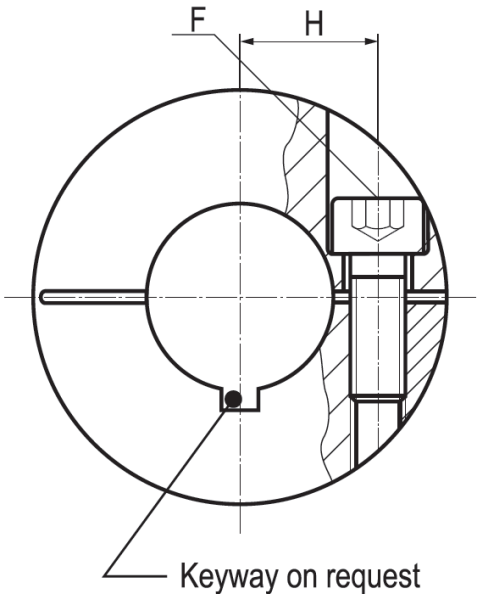

Size			18		30		60		80		150		200		300		500	
Torque	[Nm]		18		30		60		80		150		200		300		500	
Total length	[mm]	L	62	70	73	81	85	95	95	106	95	106	105	117	114	125	136	147
Length	[mm]	L_1	48	56	54	62	62	72	71.5	82.5	71.5	82.5	79	91	85	96	92	103
Length	[mm]	L_2	14		19		23		23.5		23.5		26		29		44	
Length	[mm]	L_3	22		31		35		37.5		37.5		42		47		66	
Outer-Ø	[mm]	A	45		56		66		82		82		90		110		122	
Outer-Ø with screw head	[mm]	B	47.4		56.4		66		82.9		82.9		90.8		110		122	
Distance	[mm]	C_1	5.5		7.5		10		11		11		13		13		15	
Distance	[mm]	C_2	5.5		7.3		8.6		9.8		9.8		10.8		10.8		13.3	
Bore-Ø (H7)	[mm]	D_1 / D_2	10 - 24		10 - 30		12 - 35		12 - 44		14 - 44		16 - 47		20 - 60		25 - 70	
Hublength	[mm]	E_1	17.5		24.5		29		33.5		33.5		38		38		42	
Hublength	[mm]	E_2	12		17		21		21.5		21.5		24		27		42	
Screw ISO 4762		F	M5		M6		M8		M10		M10		M12		M12		M12	
Tightening torque	[Nm]		8		15		40		84		84		125		145		145	
Center distance	[mm]	H	17		20		23		28		28		31		40		42	
Pre-tension	[mm]	V	0.5 - 1		0.5 - 1		0.5 - 1.5		0.5 - 1.5		0.5 - 1.5		0.5 - 1.5		0.5 - 1.5		0.5 - 2	
Weight	[kg]		0.14	0.19	0.29	0.31	0.47	0.57	0.81	0.90	0.91	1	1.16	1.26	1.68	1.78	2.5	2.6
Moment of Inertia	[g x m^2]		0.05	0.06	0.14	0.15	0.33	0.36	0.89	0.99	1.08	1.18	1.47	1.67	3.33	3.53	6.21	6.41
Spring stiffness torsional	x10^3 [Nm/rad]		20	15	38	28	75	50	128	75	155	105	175	120	502	285	690	320
Spring stiffness radial	[N/mm]		205	82	720	225	1150	340	1200	400	2020	595	2500	460	6300	1400	7790	970
Spring stiffness axial	[N/mm]		50	36	50	28	90	50	80	50	145	85	145	82	280	145	100	85
Misalignment radial	[mm]		0.2	0.25	0.15	0.25	0.15	0.25	0.2	0.25	0.2	0.25	0.2	0.25	0.2	0.25	0.2	0.25
Misalignment axial	[mm]		0.5	0.5	0.6	1	0.6	1	0.5	0.8	0.5	0.8	0.5	0.8	0.5	0.8	0.5	1
Misalignment agular	[°]		1.5	2	1.5	2	1.5	2	1.5	2	1.5	2	1.5	2	1.5	2	1.5	2
Max. rpm	[min^{-1}]		12,800		10,300		8700		6900		6900		6400		6000		5000	

Order code

Example:	KB4P	/	80	/	95	/	18	/	20pfn	/	D	/	VA
	Model		Size		Total length [mm]		Bore D_1 [mm] (for keyway attach pfn)		Bore D_2 [mm] (for keyway attach pfn)		Plug system		Options

D_1 is generally intended as the bore for the shaft ends of the sensor.