tel. +49 (0) 79 72 93 10-0
hagstrasse 10 . D-74417 gschwend
sales@eth-messtechnik.de

Datasheet

Metal bellows coupling

with collet clamps

KB4K

40 Nm up to 1500 Nm



Features

- Backlash-free
- High torsional stiffness, compensation of shaft misalignment at low restoring forces

Material

- bellows: stainless steel
- hub: up to size 60 aluminium, size 80 and up steel

Temperature range

- Up to Size 500: -30°C up to 120°C
- Size 800 and up: -30°C up to 250°C

Optional

- VA = Full stainless steel version
- VAW = Laserwelded

Product details KB4K

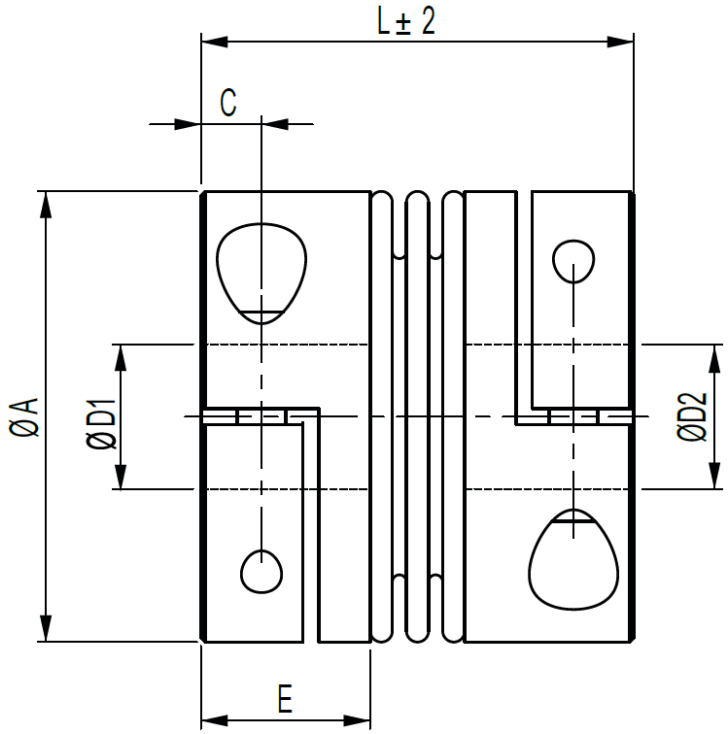

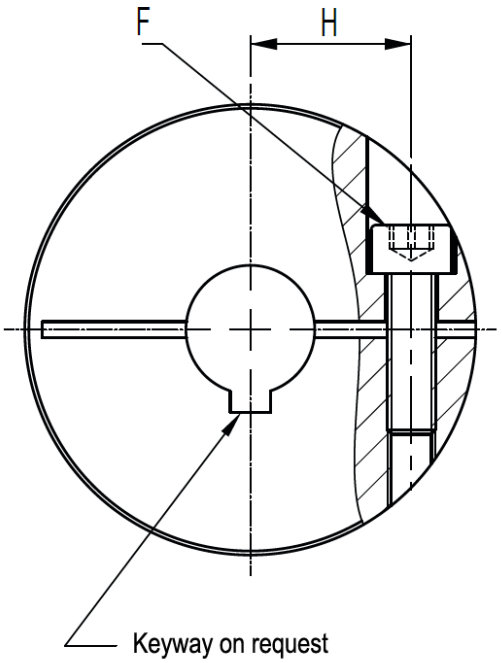

Size			10	20	40	80	200	400	650	1000	1500
Torque	[Nm]		10	20	40	80	200	400	650	1000	1500
Length	[mm]	L	35	39	46	55	60	75	78	84	96
Außen-Ø	[mm]	A	32.5	40.5	45	56	66	82	90	110	122
Distance	[mm]	C	5	5	5.5	7.3	8.6	9.8	10.8	11.8	13.3
Bore-Ø* (H7)	[mm]	D_1 / D_2	6 - 18	6 - 25	10 - 25.4	12 - 32 (30)	16 - 35	32 - 44	37 - 47	42 - 60	50 - 70
Hublength	[mm]	E	13	13.5	17.5	21	23	27	29	32.5	36
Screw ISO 4762		F	M4	M4	M5	M6	M6	M8	M10	M12	M12
Tightening torque	[Nm]		3.5	4.5	8	15	40	84	125	145	145
Center distance	[mm]	H	12	15.5	17	20	23	28	31	40	42
Weight	[kg]		0.06	0.09	0.07	0.26	0.38	0.7	0.89	1.37	1.81
Moment of Inertia	[g x m^2]		0.008	0.02	0.04	0.14	0.28	0.82	1.19	2.4	4.45
Spring stiffness torsional	x10^3 [Nm/rad]		9	15	35	53	138**	176	230	579	693
Spring stiffness radial	[N/mm]		1518	1208	3350	6436	12,442	6815	7910	29,096	20,694
Spring stiffness axial	[N/mm]		63	65	97	165	287	338	386	756	639
Misalignment radial	[mm]		0.05	0.05	0.05	0.05	0.1	0.1	0.1	0.1	0.1
Misalignment axial	[mm]		0.5	0.5	0.5	0.5	1	1	1.5	1.5	1.5
Misalignment agular	[°]		0.5	0.5	0.5	0.5	0.5	0.5	1	1	1
Max. rpm	[min^{-1}]		15,000	15,000	12,800	10,300	8700	6900	6400	6000	5000

* The maximum possible bore Ø for keyways is in brackets if it is not the largest bore Ø. ** 2-convolution bellows

Order code

Example:	KB4K	/	200	/	60	/	23	/	25pfn	/	VA
	Model		Size		Length [mm]		Bore D_1 [mm] (for keyway attach pfn)		Bore D_2 [mm] (for keyway attach pfn)		Options