tel. +49 (0) 79 72 93 10-0
hagstrasse 10 . D-74417 gschwend
sales@eth-messtechnik.de

Datasheet

Metal bellows coupling

with split hubs

KB4H

18 Nm up to 1400 Nm



Features

- Backlash-free
- High torsional stiffness, compensation of shaft misalignment at low restoring forces
- Radial assembly

Material

- bellows: stainless steel
- hub: up to size 500 aluminium, size 80 and up steel

Temperature range

- Up to Size 500: -30°C up to 120°C
- Size 800 and up: -30°C up to 250°C

Optional

- VA = Full stainless steel version
- VAW = Laserwelded

Product details KB4H

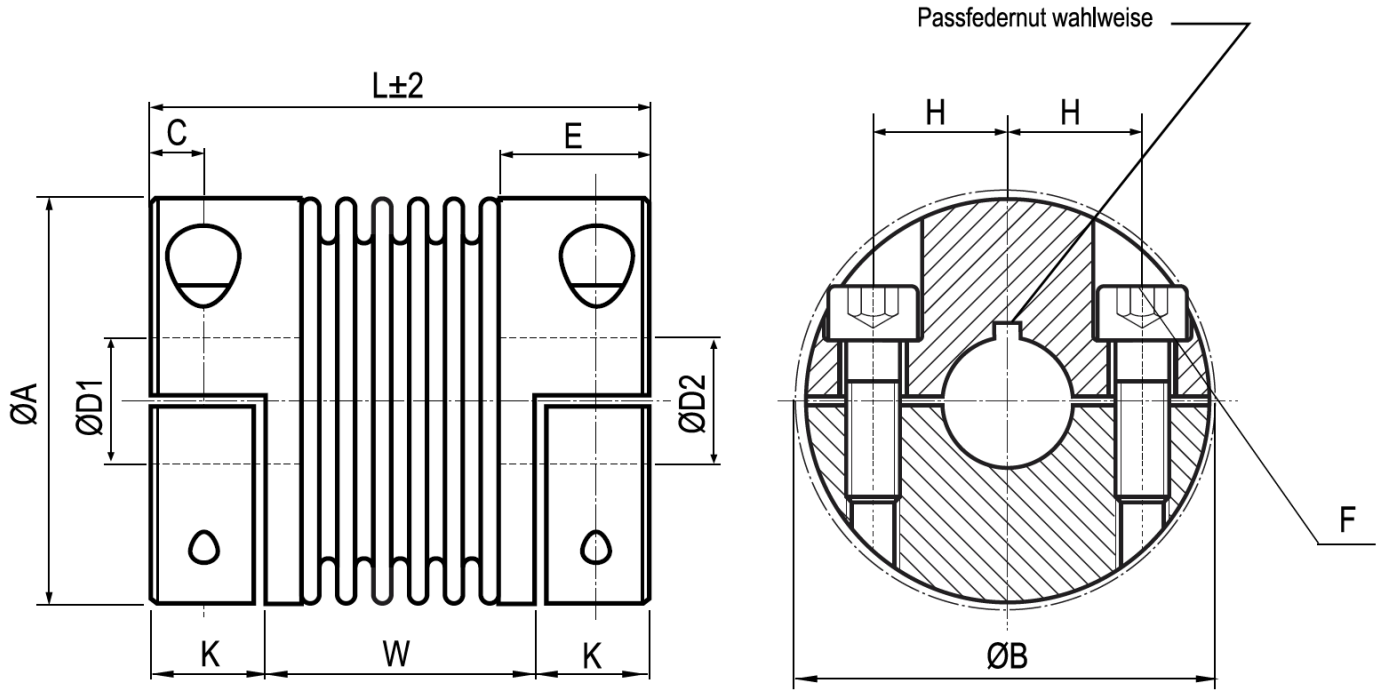

Size			18		30		60		80		150		200		300		500		800	1400
Torque	[Nm]		18		30		60		80		150		200		300		500		800	1400
Length	[mm]	L	63	71	69	77	83	93	84	106	95	107	105	117	111	125	133	146	168	168
Außen-Ø	[mm]	A	45		56		66		82		82		90		110		122		157	157
Outer-Ø with screwheads	[mm]	B	47.4		56.4		66.2		82.9		82.9		90.8		110		122		168	168
Distance	[mm]	C	5.5		7.5		9.5		11		11		12.5		13		15		22.5	22.5
Bore-Ø* (H7)	[mm]	D_1 / D_2	10 - 25.4		10 - 32 (30)		12 - 35		12 - 44		14 - 44		16 - 47		20 - 60		25 - 70		40 - 80	50 - 80
Hublength	[mm]	E	19.5		27		31		36		36		41		41		51		66.5	66.5
Screw ISO 4762		F	M5		M6		M8		M10		M10		M12		M12		M12		M20	M20
Tightening torque	[Nm]		8		15		40		84		84		125		145		145		400	400
Center distance	[mm]	H	17		20		23		28		28		31		40		42		55	55
Length of center section	[mm]	W	37	45	35	43	41	51	47	59	48	60	51	63	55	69	62	75	77	77
Weight	[kg]		0.1	0.15	0.3	0.32	0.5	0.6	0.9	0.95	0.9	0.95	1.3	1.35	1.8	1.85	2.5	2.51	14.8	15.3
Moment of Inertia	[g x m^2]		0.04	0.05	0.14	0.15	0.28	0.29	0.65	0.67	0.82	0.86	2.2	2.7	4.2	5.2	8.6	9.3	57.65	58.7
Spring stiffness torsional	x10^3 [Nm/rad]		20	15	38	28	75	50	128	75	155	105	175	120	502	285	690	320	1270	1270
Spring stiffness radial	[N/mm]		205	82	720	225	1150	340	1200	400	2020	595	2500	460	6300	1400	7790	970	700	700
Spring stiffness axial	[N/mm]		50	36	50	28	90	50	80	50	145	85	145	82	280	145	100	85	275	275
Misalignment radial	[mm]		0.2	0.25	0.15	0.25	0.15	0.25	0.2	0.25	0.2	0.25	0.2	0.25	0.2	0.25	0.2	0.25	0.2	0.2
Misalignment axial	[mm]		0.5	0.5	0.6	1	0.6	1	0.5	0.8	0.5	0.8	0.5	0.8	0.5	0.8	0.5	1	0.8	0.8
Misalignment agular	[°]		1.5	2	1.5	2	1.5	2	1.5	2	1.5	2	1.5	2	1.5	2	1.5	2	1.8	1.8
Max. rpm	[min^{-1}]		12,800		10,300		8700		6900		6900		6400		6000		5000		5000	5000

* The maximum possible bore Ø for keyways is in brackets if it is not the largest bore Ø.

Order code

Example:	KB4H	/	80	/	94	/	23	/	25pfn	/	VA
	Model		Size		Length [mm]		Bore D_1 [mm] (for keyway attach pfn)		Bore D_2 [mm] (for keyway attach pfn)		Options