tel. +49 (0) 79 72 93 10-0
hagstrasse 10 . D-74417 gschwend
sales@eth-messtechnik.de

Datasheet

Metal bellows coupling

compact with collet clamps

KB4C

18 Nm up to 500 Nm



Features

- Backlash-free
- High torsional stiffness, compensation of shaft misalignment at low restoring forces

Material

- bellows: stainless steel
- hub: aluminium

Temperature range

-30°C up to 120°C

Optional

- VA = Full stainless steel version
- VAW = Laserwelded

Product details KB4C

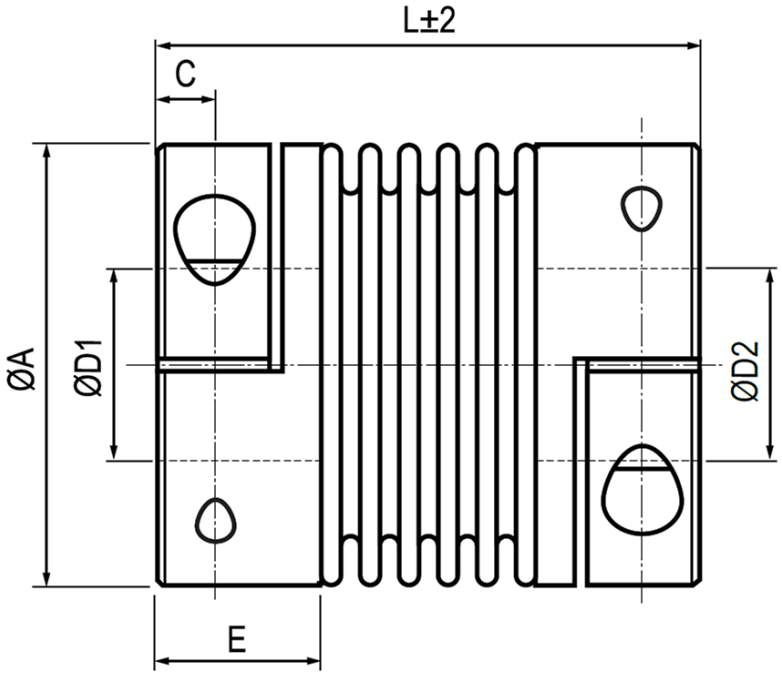

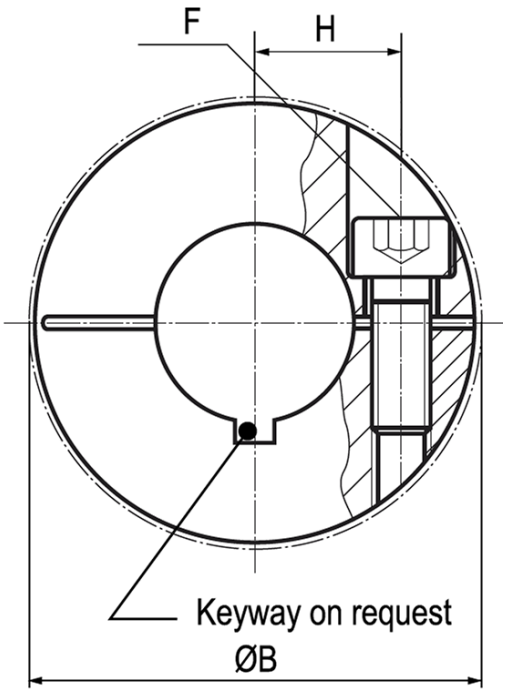

Size			18		30		60		80		150		200		300		500	
Torque	[Nm]		18		30		60		80		150		200		300		500	
Length	[mm]	L	58	66	58	66	67	77	78	89	78	89	63	94	94	105	100	111
Außen-Ø	[mm]	A	45		56		66		82		82		90		110		122	
Outer-Ø with screwheads	[mm]	B	47.4		56.4		66.2		82.9		82.9		90.8		110		122	
Distance	[mm]	C	5.5		7.3		8.6		9.8		9.8		10.8		11.8		13.3	
Bore-Ø* (H7)	[mm]	D_1 / D_2	10 - 25.4		10 - 32 (30)		12 - 35		12 - 44		14 - 44		16 - 47		20 - 60		25 - 70	
Hublength	[mm]	E	17.5		21		24		27		27		29		32.5		36	
Screw ISO 4762		F	M5		M6		M8		M10		M10		M12		M12		M12	
Tightening torque	[Nm]		8		15		40		84		84		125		145		145	
Center distance	[mm]	H	17		20		24		28		28		31		40		42	
Weight	[kg]		0.07	0.12	0.26	0.27	0.38	0.42	0.7	0.76	0.73	0.8	0.89	0.95	1.37	1.43	1.81	1.91
Moment of Inertia	[g x m^2]		0.03	0.04	0.13	0.14	0.28	0.31	0.78	0.85	0.82	0.89	1.19	1.27	2.74	2.86	4.45	4.69
Spring stiffness torsional	x10^3 [Nm/rad]		20	15	38	28	75	50	128	75	155	105	175	120	502	285	690	320
Spring stiffness radial	[N/mm]		205	82	720	225	1150	340	1200	400	2020	595	2500	460	6300	1400	7790	970
Spring stiffness axial	[N/mm]		50	36	50	28	90	50	80	50	145	85	145	82	280	145	100	85
Misalignment radial	[mm]		0.2	0.25	0.15	0.25	0.15	0.25	0.2	0.25	0.2	0.25	0.2	0.25	0.2	0.25	0.2	0.25
Misalignment axial	[mm]		0.5	0.5	0.6	1	0.6	1	0.5	0.8	0.5	0.8	0.5	0.8	0.5	0.8	0.5	1
Misalignment agular	[°]		1.5	2	1.5	2	1.5	2	1.5	2	1.5	2	1.5	2	1.5	2	1.5	2
Max. rpm	[min^{-1}]		12,800		10,300		8700		6900		6900		6400		6000		5000	

* The maximum possible bore Ø for keyways is in brackets if it is not the largest bore Ø.

Order code

Example:	KB4C	/	80	/	78	/	23	/	25pfn	/	VA
	Model		Size		Length [mm]		Bore D_1 [mm] (for keyway attach pfn)		Bore D_2 [mm] (for keyway attach pfn)		Options