tel. +49 (0) 79 72 93 10-0
hagstrasse 10 . D-74417 gschwend
sales@eth-messtechnik.de

Datasheet

Metal bellows coupling

in aluminium with collet clamps

KB4AL

80 Nm up to 500 Nm



Features

- Backlash-free
- High torsional stiffness, compensation of shaft misalignment at low restoring forces
- Easy to assemble and low inertia

Material

- bellows: stainless steel
- hub: aluminium

Temperature range

-30°C up to 120°C

Optional

- VA = Full stainless steel version
- VAW = Laserwelded

Product details KB4AL

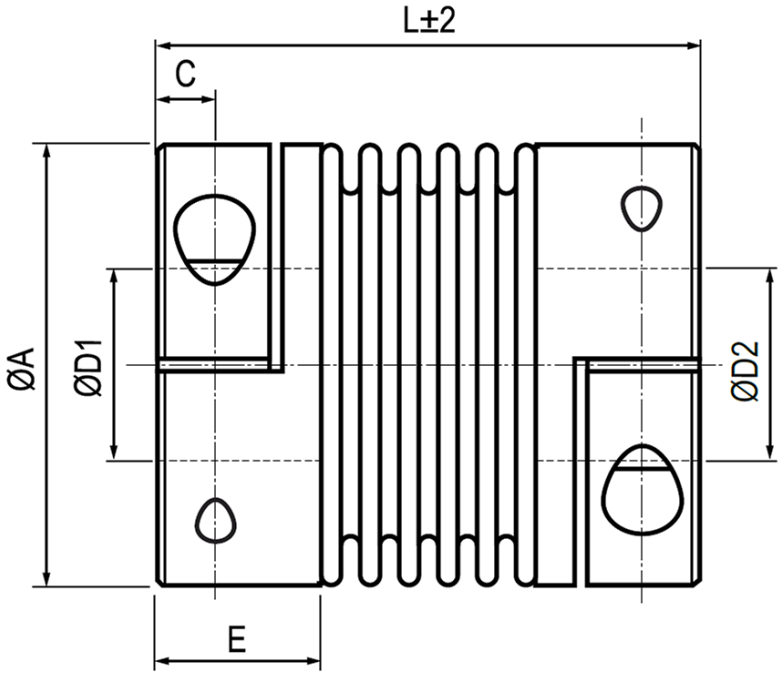

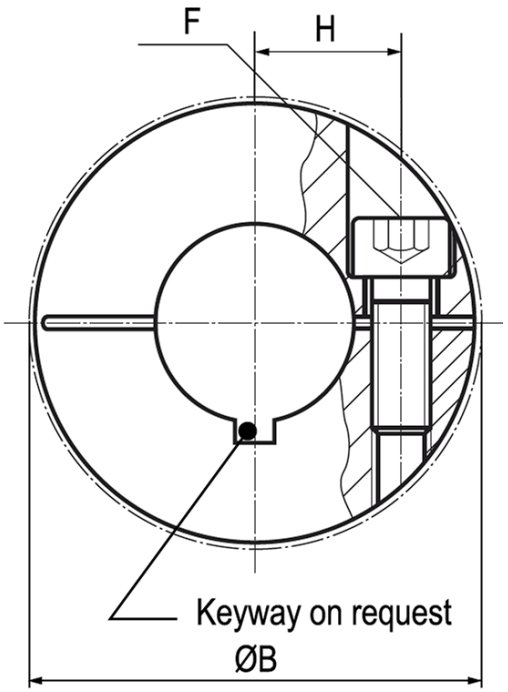

Size			80		150		200		300		500	
Torque	[Nm]		80		150		200		300		500	
Length	[mm]	L	91	102	91	102	101	113	105	116	112	123
Außen-Ø	[mm]	A	82		82		90		110		122	
Outer-Ø with screwheads	[mm]	B	82.9		82.9		90.8		110		122	
Distance	[mm]	C	11		11		13		13		15	
Bore-Ø* (H7)	[mm]	D_1 / D_2	12 - 44		14 - 44		16 - 47		20 - 60		25 - 70	
Hublength	[mm]	E	33.5		33.5		38		38		42	
Screw ISO 4762		F	M10		M10		M12		M12		M12	
Tightening torque	[Nm]		84		84		125		145		145	
Center distance	[mm]	H	28		28		31		40		42	
Weight	[kg]		0.8	0.85	0.9	0.95	1.17	1.21	1.62	1.66	2.4	2.5
Moment of Inertia	[g x m^2]		0.9	0.95	1	1.05	1.49	1.57	3.28	3.37	6.4	6.7
Spring stiffness torsional	x10^3 [Nm/rad]		128	75	155	105	175	120	502	285	690	320
Spring stiffness radial	[N/mm]		1200	400	2020	595	2500	460	6300	1400	7790	970
Spring stiffness axial	[N/mm]		80	50	145	85	145	82	280	145	100	85
Misalignment radial	[mm]		0.2	0.25	0.2	0.25	0.2	0.25	0.2	0.25	0.2	0.25
Misalignment axial	[mm]		0.5	0.8	0.5	0.8	0.5	0.8	0.5	0.8	0.5	1
Misalignment agular	[°]		1.5	2	1.5	2	1.5	2	1.5	2	1.5	2
Max. rpm	[min^{-1}]		6900		6900		6400		6000		5000	

Order code

Example:	KB4AL	/	80	/	91	/	23	/	25pfn	/	VA
	Model		Size		Length [mm]		Bore D_1 [mm] (for keyway attach pfn)		Bore D_2 [mm] (for keyway attach pfn)		Options