tel. +49 (0) 79 72 93 10-0
hagstrasse 10 . D-74417 gschwend
sales@eth-messtechnik.de

Datasheet

Metal bellows coupling

with collet clamps

KB4

18 Nm up to 1400 Nm



Features

- Backlash-free
- High torsional stiffness, compensation of shaft misalignment at low restoring forces
- Easy to assemble

Material

- bellows: stainless steel
- hub: up to size 60 aluminium, size 80 and up steel

Temperature range

- Up to Size 500: -30°C up to 120°C
- Size 800 and up: -30°C up to 250°C

Optional

- VA = Full stainless steel version
- VAW = Laserwelded

Product details KB4

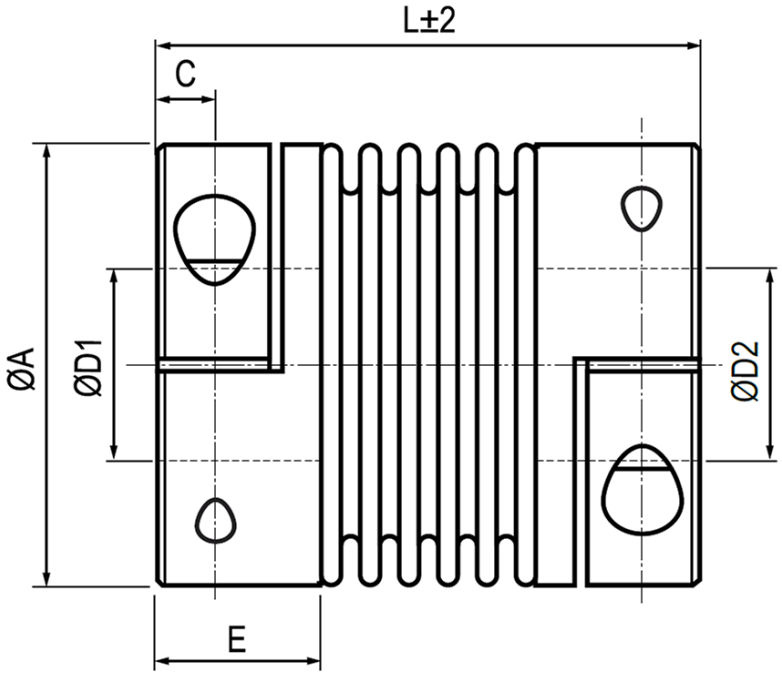

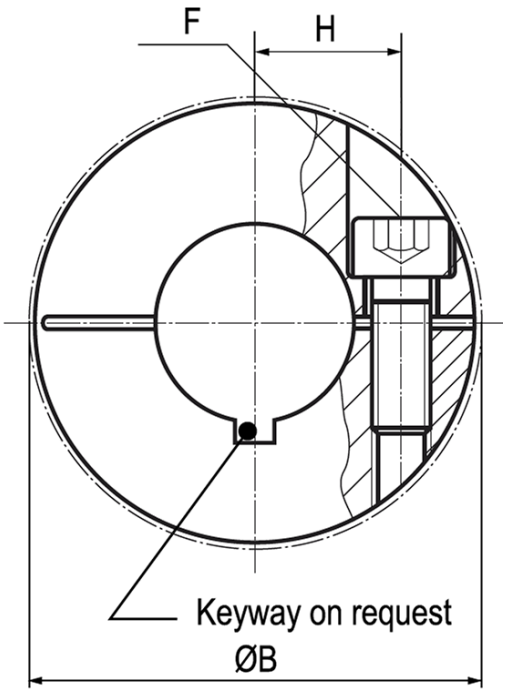

Size			18		30		60		80		150		200		300		500		800	1400
Torque	[Nm]		18		30		60		80		150		200		300		500		800	1400
Length	[mm]	L	63	71	65	73	79	89	91	102	91	102	101	113	105	116	112	123	168	168
Outer-Ø	[mm]	A	45		56		66		82		82		90		110		122		157	157
Outer-Ø with screwheads	[mm]	B	47.4		56.4		66		82.9		82.9		90.8		110		122		170.3	170.3
Distance	[mm]	C	5.5		7.5		10		11		11		13		13		15		22.5	22.5
Bore-Ø* (H7)	[mm]	D_1 / D_2	10 - 25.4		10 - 32 (30)		12 - 35		14 - 44		19 - 44		22 - 47		30 - 60		35 - 70		40 - 80	50 - 80
Hublength	[mm]	E	19.5		24.5		29		33.5		33.5		38		38		42		55	55
Screw ISO 4762		F	M5		M6		M8		M10		M10		M12		M12		M12		2x M20	2x M20
Tightening torque	[Nm]		8		15		40		84		84		125		145		145		400	470
Center distance	[mm]	H	17		20		23		28		28		31		40		42		55	55
Weight	[kg]		0.1	0.15	0.3	0.32	0.5	0.6	2.3	2.4	2.3	2.4	2.6	2.7	4.3	4.4	5.5	5.6	14.3	14.8
Moment of Inertia	[g x m^2]		0.04	0.05	0.15	0.16	0.33	0.36	2.3	2.4	2.5	2.6	3.3	3.5	7.6	7.8	13.5	13.7	56.9	57.7
Spring stiffness torsional	x10^3 [Nm/rad]		20	15	38	28	75	50	128	75	155	105	175	120	502	285	690	320	1270	1270
Spring stiffness radial	[N/mm]		205	82	720	225	1150	340	1200	400	2020	595	2500	460	6300	1400	7790	970	700	700
Spring stiffness axial	[N/mm]		50	36	50	28	90	50	80	50	145	85	145	82	280	145	100	85	275	275
Misalignment radial	[mm]		0.2	0.25	0.15	0.25	0.15	0.25	0.2	0.25	0.2	0.25	0.2	0.25	0.2	0.25	0.2	0.25	0.2	0.2
Misalignment axial	[mm]		0.5	0.5	0.6	1	0.6	1	0.5	0.8	0.5	0.8	0.5	0.8	0.5	0.8	0.5	1	0.8	0.8
Misalignment agular	[°]		1.5	2	1.5	2	1.5	2	1.5	2	1.5	2	1.5	2	1.5	2	1.5	2	1.8	1.8
Max. rpm	[min^{-1}]		12,800		10,300		8700		6900		6900		6400		6000		5000		5000	5000

* The maximum possible bore Ø for keyways is in brackets if it is not the largest bore Ø.

Order code

Example:	KB4	/	80	/	91	/	23	/	25pfn	/	VA
	Model		Size		Length [mm]		Bore D_1 [mm] (for keyway attach pfn)		Bore D_2 [mm] (for keyway attach pfn)		Options