tel. +49 (0) 79 72 93 10-0
hagstrasse 10 . D-74417 gschwend
sales@eth-messtechnik.de

Datasheet

Miniture metal bellows coupling

axial pluggable, with collet clamps

KB2P

0.5 Nm up to 10 Nm



Features

- Backlash-free
- High torsional stiffness, compensation of shaft misalignment at low restoring forces
- Easy assembly with friction-locked clamp hubs

Optional

- VA = Full stainless steel version
- VAW = Laserwelded

Rpm

Max. 15.000 min^{-1}

Material

- Bellows: stainless steel
- Hub: aluminium

Temperature range

-30°C up to 120°C

Plug system

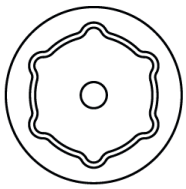

version D:
multi position
(standard)

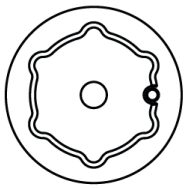

version C:
single position
(on request)

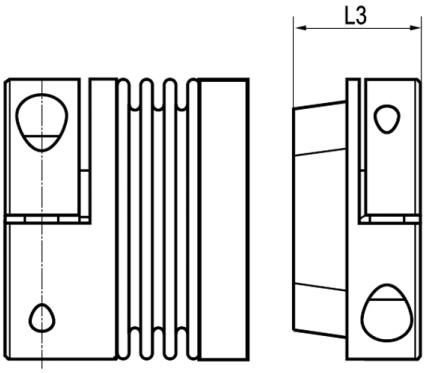

Product details KB2P

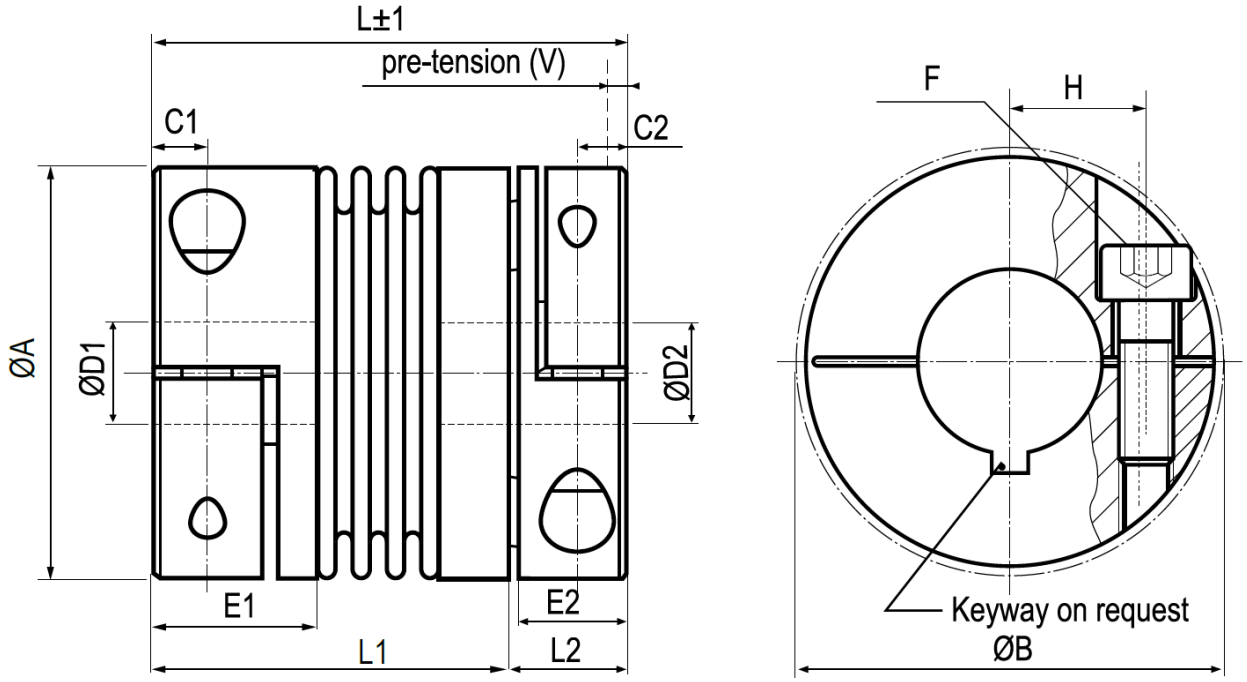

Size			5			10			15		20			45		100	
Torque	[Nm]		0.5			1			1.5		2			4.5		10	
Total length	[mm]	L	25	29	32	27	30	32	30	35	37	43	47	49	58	56	66
Length	[mm]	L_1	18	22	25	20	23	25	22.5	27..5	26	32	36	36	45	43	53
Length	[mm]	L_2	7			7			7.5		11			14		14	
Length	[mm]	L_3	11			11			12.5		16			20		21	
Outer-Ø	[mm]	A	15.5			15.5			20		25			32.5		40.5	
Outer-Ø with screw head	[mm]	B	17.5			17.5			21		27			34		41.5	
Distance	[mm]	C_1 / C_2	2.5			2.5			3		3.5			5		5	
Bore-Ø (H7)	[mm]	D_1	3 - 8			3 - 8			3 - 10		3 - 14			6 - 18		6 - 25	
Bore-Ø* (H7)	[mm]	D_2	3 - 8			3 - 8			3 - 10 (7)		3 - 14 (10)			6 - 16 (11)		6 - 25 (18)	
Hublength	[mm]	E_1	7			7			8.5		11			13		13.5	
Hublength	[mm]	E_2	6			6			6.5		10			12		12	
Screw ISO 4029		F	M2			M2			M2.5		M3			M4		M4	
Tightening torque	[Nm]		0.43			0.43			0.85		2			3.5		4.5	
Center distance	[mm]	H	5.2			5.2			7		9			12		15.5	
Pre-tension	[mm]	V	0.5			0.5			0.5		0.5			0.5		1	
Weight	[g]		8.7	9.1	9.6	10.5	10.8	11.7	15.2	17.5	33.8	37.3	38.5	71	78	100	123.5
Moment of Inertia	[g x cm^2]		3.1	3.3	3.5	3.6	3.9	4.3	9.3	10.8	27.8	31.3	33.6	116	129.9	270.3	336.4
Spring stiffness torsional	[Nm/rad]		260	200	160	510	380	310	750	700	1500	1300	1050	6500	4200	8100	6800
Spring stiffness radial	[N/mm]		43	18	9	74	31	16	59	20	67	21	11	168	41	120	29
Spring stiffness axial	[N/mm]		13	10	8	27	20	16	15	9	12	11	9	32	20	27	17
Misalignment radial	[mm]		0.1	0.15	0.2	0.1	0.15	0.2	0.1	0.15	0.15	0.2	0.25	0.1	0.2	0.15	0.3
Misalignment axial	[mm]		0.2	0.3	0.4	0.2	0.3	0.4	0.3	0.4	0.3	0.4	0.5	0.3	0.5	0.4	0.6
Misalignment agular	[°]		1	1.5	2	1	1.5	2	1.5	2	1.5	1.5	2	1.5	2	1.5	2

* The maximum possible bore Ø for keyways is in brackets if it is not the largest bore Ø.

Order code

Example:	KB2P	/	20	/	43	/	7	/	9pfn	/	D	/	VA
	Model		Size		Total length [mm]		Bore D_1 [mm] (for keyway attach pfn)		Bore D_2 [mm] (for keyway attach pfn)		Plug system		Options

D_1 is generally intended as the bore for the shaft ends of the sensor.