tel. +49 (0) 79 72 93 10-0
hagstrasse 10 . D-74417 gschwend
sales@eth-messtechnik.de

Datasheet

Miniture metal bellows coupling

with split hubs

KB2H

0.5 Nm up to 10 Nm



Features

- Backlash-free
- High torsional stiffness, compensation of shaft misalignment at low restoring forces
- Radial assembly

Rpm

Max. 15.000 min^{-1}

Material

- Bellows: stainless steel
- Hub: aluminium

Temperature range

-30°C up to 120°C

Optional

- VA = Full stainless steel version
- VAW = Laserwelded

Product details KB2H

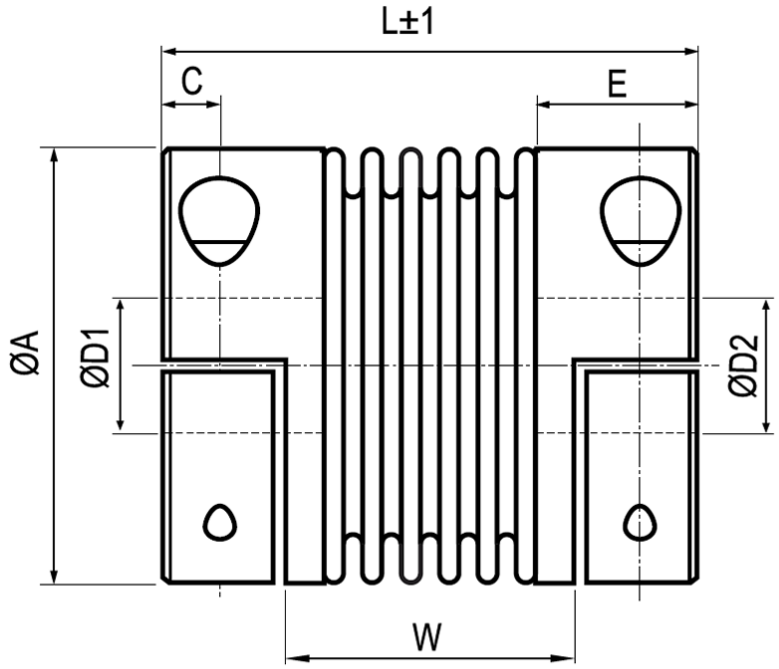

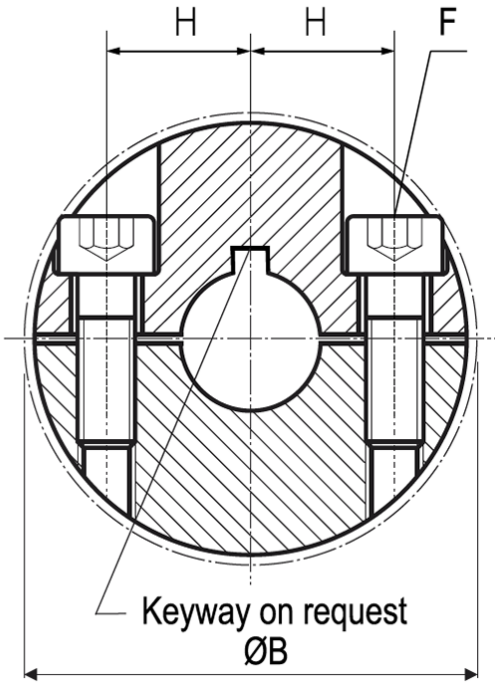

Size			5			10			15		20			45		100	
Drehmoment	[Nm]		0.5			1			1.5		2			4.5		10	
Length	[mm]	L	21	25	28	23	26	31	26	31	32	38	42	41	50	47	57
Outer-Ø	[mm]	A	15.5			15.5			20		25			32.5		40.5	
Outer-Ø with screwhead	[mm]	B	17.5			17.5			21		27			34		41.5	
Distance	[mm]	C	2.5			2.5			3		3.5			5		5	
Bore-Ø (H7)	[mm]	D_1 / D_2	3 - 8			3 - 8			3 - 10		3 - 14			6 - 16		6 - 25	
Hublength	[mm]	E	7			7			8.5		11			13		13.5	
Screw ISO 4762		F	M2			M2			M2.5		M3			M4		M4	
Tightening torque	[Nm]		0.43			0.43			0.85		2			3.5		4.5	
Center distance	[mm]	H	5.2			5.2			7		9			12		15.5	
Length of center section	[mm]	W	12	16	19	14	17	22	14.4	19.4	18.4	24.4	28.4	24	33	29	39
Weight	[g]		7.5	7.8	8.2	9	9.3	10	13	15	29	32	33	61	67	86	106
Moment of Inertia	[g x cm²]		2.7	2.8	3	3.1	3.4	3.7	8	9.3	24	27	29	100	112	233	290
Spring stiffness torsional	[Nm/rad]		260	200	160	510	380	310	750	700	1500	1300	1050	6500	4200	8100	6800
Spring stiffness radial	[N/mm]		43	18	9	74	31	16	59	20	67	21	11	168	41	120	29
Spring stiffness axial	[N/mm]		13	10	8	27	20	16	15	9	12	11	9	32	20	27	17
Misalignment radial	[mm]		0.1	0.15	0.2	0.1	0.15	0.2	0.1	0.15	0.15	0.2	0.25	0.1	0.2	0.15	0.3
Misalignment axial	[mm]		0.2	0.3	0.4	0.2	0.3	0.4	0.3	0.4	0.3	0.4	0.5	0.3	0.5	0.4	0.6
Misalignment agular	[°]		1	1.5	2	1	1.5	2	1.5	2	1.5	1.5	2	1.5	2	1.5	2

Order code

Example:	KB2H	/	20	/	33	/	7	/	9pfn	/	VA
	Model		Size		Total length [mm]		Bore D_1 [mm] (for keyway attach pfn)		Bore D_2 [mm] (for keyway attach pfn)		Options