tel. +49 (0) 79 72 93 10-0
hagstrasse 10 . D-74417 gschwend
sales@eth-messtechnik.de

Datasheet

Miniture metal bellows coupling

axial pluggable, with set screws

KB1P

0.5 Nm up to 10 Nm



Features

- Backlash-free
- High torsional stiffness, compensation of shaft misalignment at low restoring forces
- Axial pluggable design

Rpm

Max. 15.000 min^{-1}

Material

- Bellows: stainless steel
- Hub: aluminium

Temperature range

-30°C up to 120°C

Optional

- VA = Full stainless steel version
- VAW = Laserwelded

Plug system

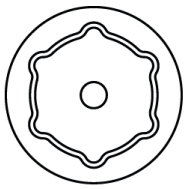

version D:
multi position
(standard)

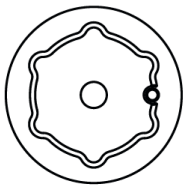

version C:
single position
(on request)

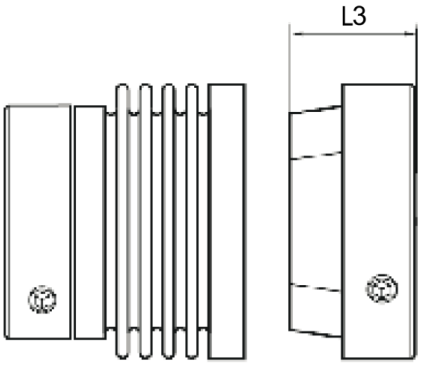

Product details KB1P

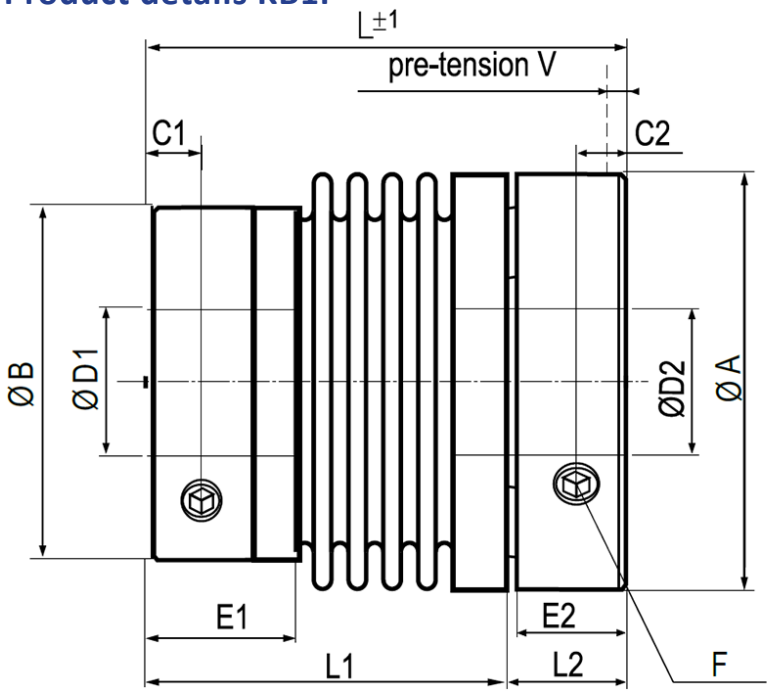

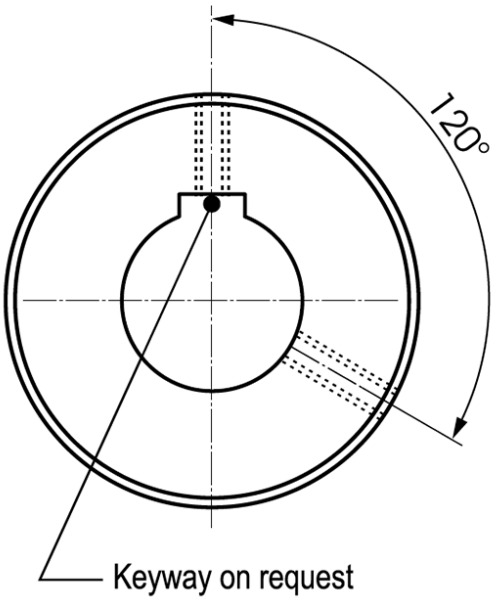

Size			5			10			15		20			45		100	
Drehmoment	[Nm]		0.5			1			1.5		2			4.5		10	
Total length	[mm]	L	22	26	30	24	28	32	28	32	27	33	37	44	52	50	60
Length	[mm]	L_1	17	21	25	19	23	27	22	26	21	27	31	35	43	41	51
Length	[mm]	L_2	5			5			6		6			9		9	
Length	[mm]	L_3	9			9			11		11			16		17	
Outer-Ø	[mm]	A	15.5			15.5			20		25			32.5		40.5	
Hub-Ø	[mm]	B	13.5			13.5			19		21.5			29		36	
Distance	[mm]	C_1	2			2			3		3			4		4	
Distance	[mm]	C_2	2			2			2.5		2.5			4		4	
Bore-Ø* (H7)	[mm]	D_1	3 - 8			3 - 8			3 - 12 (8)		3 - 14 (10)			6 - 19 (13)		6 - 24 (17)	
Bore-Ø* (H7)	[mm]	D_2	3 - 8			3 - 8			3 - 10 (7)		3 - 14 (10)			6 - 16 (11)		6 - 25 (18)	
Hublength	[mm]	E_1	6			6			8		6			12		12	
Hublength	[mm]	E_2	4			4			5		5			8		8	
Screw ISO 4029		F	1x M3			1x M3			2x M4		2x M4			2x M6		2x M6	
Tightening torque	[Nm]		0.5			0.5			1.5		1.5			3		3	
Pre-tension	[mm]	V	0.5			0.5			0.5		0.5			0.5		1	
Weight	[g]		5.9	6.6	7.4	8.1	8.8	10.3	14.7	17.6	16.2	19.1	22	64.7	73.5	88.2	116.1
Moment of Inertia	[g x cm²]		1.9	2.2	2.4	2.7	2.9	3.4	8.8	10.9	13.5	17.5	19.9	100	116	220.5	308.7
Spring stiffness torsional	[Nm/rad]		260	200	160	510	380	310	750	700	1500	1300	1050	6500	4200	8100	6800
Spring stiffness radial	[N/mm]		43	18	9	74	31	16	59	20	67	21	11	168	41	120	29
Spring stiffness axial	[N/mm]		13	10	8	27	20	16	15	9	12	11	9	32	20	27	17
Misalignment radial	[mm]		0.1	0.15	0.2	0.1	0.15	0.2	0.1	0.15	0.15	0.2	0.25	0.1	0.2	0.15	0.3
Misalignment axial	[mm]		0.2	0.3	0.4	0.2	0.3	0.4	0.3	0.4	0.3	0.4	0.5	0.3	0.5	0.4	0.6
Misalignment agular	[°]		1	1.5	2	1	1.5	2	1.5	2	1.5	1.5	2	1.5	2	1.5	2

* The maximum possible bore Ø for keyways is in brackets if it is not the largest bore Ø.

Order code

Example:	KB1P	/ 20	/ 33	/ 7	/ 9pfn	/ D	/ VA
	Model	Size	Total length [mm]	Bore D_1 [mm] (for keyway attach pfn)	Bore D_2 [mm] (for keyway attach pfn)	Plug system	Options

D_1 is generally intended as the bore for the shaft ends of the sensor.