tel. +49 (0) 79 72 93 10-0
hagstrasse 10 . D-74417 gschwend
sales@eth-messtechnik.de

Datasheet

Miniture metal bellows coupling

with set screws

KB1

0.05 Nm up to 30 Nm



Features

- Backlash-free
- High torsional stiffness, compensation of shaft misalignment at low restoring forces
- Very cost-effective design

Rpm

Max. 15.000 min^{-1}

Material

- Bellows: size 05 bronze, size 1 and up stainless steel
- Hub: aluminium

Temperature range

-30°C up to 120°C

Optional

- VA = Full stainless steel version
- VAW = Laserwelded

Product details KB1

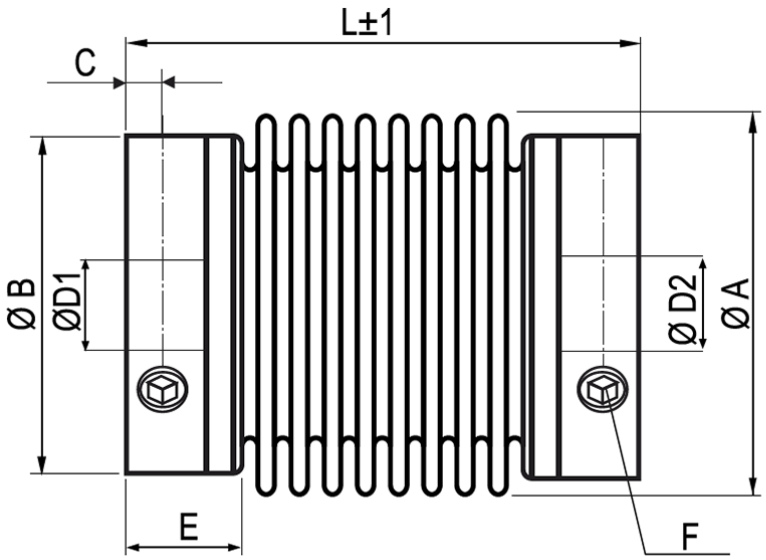

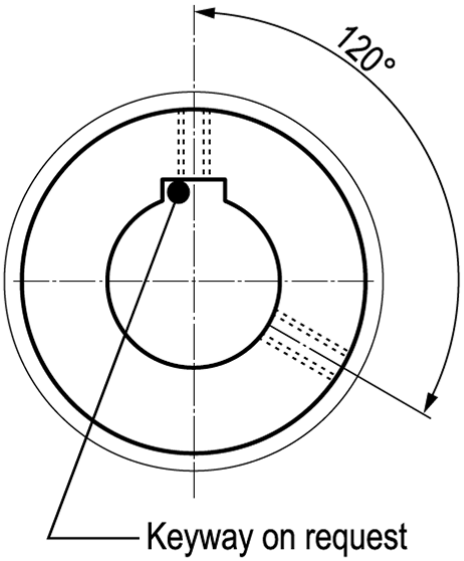

Size			05	1	5			10			15		20			45		100		180		300	
Torque	[Nm]		0.05	0.1	0.5			1			1.5		2			4.5		10		18		30	
Length	[mm]	L	14	23	19	23	27	21	25	29	26	30	22	28	32	40	48	45	55	63	71	65	73
Outer-Ø	[mm]	A	6.5	10	15			15			19		24			32		40		45		56	
Hub-Ø	[mm]	B	6.5	10	13.5			13.5			19		21.5			29		36		44		54	
Distance	[mm]	C	1.5	2	2			2			3		3			4		4		7		9	
Bore-Ø* (H7)	[mm]	D_1/D_2	1-3	1-4	3 - 8			3 - 8			3-12 (8)		3-14 (10)			6-19 (13)		6-24 (17)		10-28		10-34	
Hublength	[mm]	E	4	6	6			6			8		6			12		12		19.5		24.5	
Screw ISO 4029		F	1x M2	1x M3	1x M3			1x M3			2x M4		2x M4			2x M6		2x M6		2x M8		2x M8	
Tightening torque	[Nm]		0.35	0.5	0.5			0.5			1.5		1.5			3		3		20		20	
Weight	[g]		1	3	4	4.5	5	5.5	6	7	10	12	11	13	15	44	50	60	79	100	150	180	200
Moment of Inertia	[g x cm^2]		0.1	0.45	1.3	1.5	1.6	1.8	2	2.3	6	7.4	9.2	12.6	13.5	68	79	150	210	339	396	945	958
Spring stiffness torsional	[Nm/rad]		50	65	260	200	160	510	380	310	750	700	1500	1300	1050	6500	4200	8100	6800	20,000	15,000	38,000	28,000
Spring stiffness radial	[N/mm]		6	10	43	18	9	74	31	16	59	20	67	21	11	168	41	120	29	205	82	720	225
Spring stiffness axial	[N/mm]		9	14	13	10	8	27	20	16	15	9	12	11	9	32	20	27	17	50	36	50	28
Misalignment radial	[mm]		0.1	0.12	0.1	0.15	0.2	0.1	0.15	0.2	0.1	0.15	0.15	0.2	0.25	0.1	0.2	0.15	0.3	0.2	0.25	0.15	0.25
Misalignment axial	[mm]		0.4	0.2	0.2	0.3	0.4	0.2	0.3	0.4	0.3	0.4	0.3	0.4	0.5	0.3	0.5	0.4	0.6	0.5	0.5	0.6	1
Misalignment agular	[°]		1	1.2	1	1.5	2	1	1.5	2	1.5	2	1.5	1.5	2	1.5	2	1.5	2	1.5	2	1.5	2

* The maximum possible bore Ø for keyways is in brackets if it is not the largest bore Ø.

Order code

Example:	KB1	/	10	/	25	/	5	/	7pfn	/	VA
	Model		Size		Length [mm]		Bore D_1 [mm] (for keyway attach pfn)		Bore D_2 [mm] (for keyway attach pfn)		Options