tel. +49 (0) 79 72 93 10-0
hagstrasse 10 . D-74417 gschwend
sales@eth-messtechnik.de

Datasheet

Spring disc coupling

FSXK

20 Ncm, 80 Ncm



Features

- Backlash-free angularly aligned transmission
- good compensation for all misalignments
- very high torsional stiffness
- small restoring forces
- vibration damping
- suitable for very high speeds

Material

- Spring disc: Stainless steel
- Flange: Size 2213 nickel plated steel and size 3019 anodised aluminium

Temperature range

-30 bis 120°C

Product details FSXK

FSXK2213

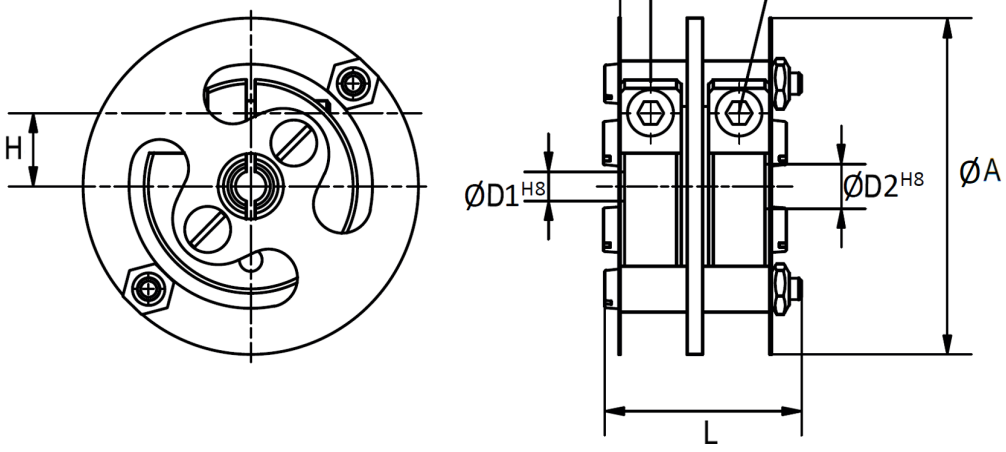

FSXK3019

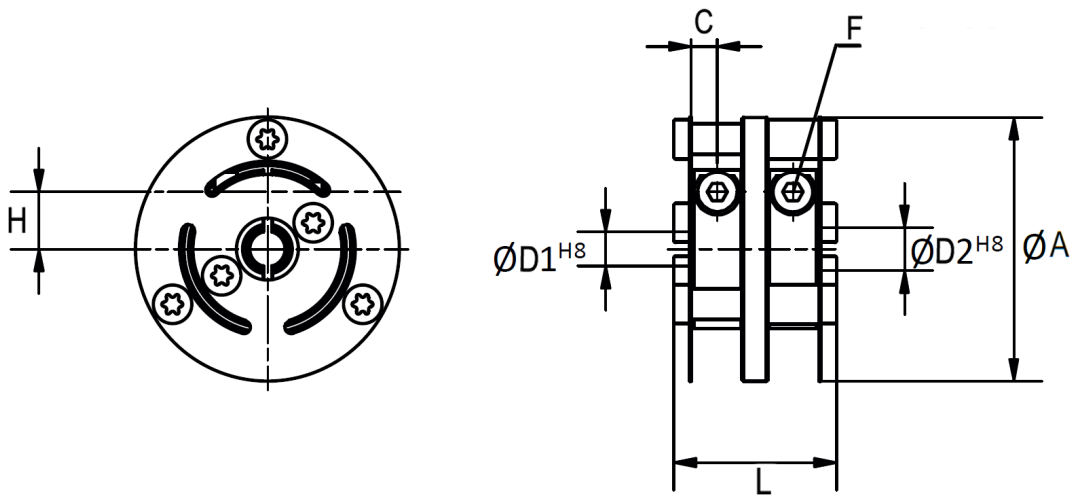

Size			2213	3019
Torque	[Ncm]		20	80
Length	[mm]	L	13	18,2
Outer - Ø	[mm]	A	22	30
Distance	[mm]	C	2	3
Bore - Ø (H8)	[mm]	D_1 / D_2	2 / 3 / 4	3 / 4 / 5 / 6 / 6,3 / 8 / 10
Set screw ISO 4029		F	2x M1,6	2x M2,5
Tightening torque	[Ncm]		20	80
Center ditance	[mm]	H	4,8	6,5
Weight (Approx.)	[g]		9,5	16
Moment of Inertia	[g x cm^2]		3,2	19
Spring stiffness torsional	[Nm/rad]		14	150
Spring stiffness radial	[N/mm]		3	6
Misalignment radial	[mm]		±0,3	±0,4
Misalignment axial	[mm]		±0,3	±0,4
Misalignment agular	[°]		±2	±3
Max. rpm	[min^{-1}]		10.000	12.000

Order code

Example:	BKNK1730 /	4 /	5
	Modell	Size	Bore D_1 [mm]	Bore D_2 [mm]