tel. +49 (0) 79 72 93 10-0
hagstrasse 10 . D-74417 gschwend
sales@eth-messtechnik.de

Datasheet

Torque limiter

with clamping hubs and elastomer coupling

ES2

1 Nm up to 1800 Nm | Vibration damping



Properties

- Vibration dampening
- Compensation for misalignments
- Torque continuously adjustable

Material

- **Clutch system:** hardened steel
- **Hub D_1:** up to size 450 high strength aluminium, size 800 and up steel
- **Hub D_2:** up to size 60 high strength aluminium, size 150 and up steel
- **Elastomer insert:** wear resistent thermally stable TPU

Design

Two clamping hubs with one clamping screw in each and concave diving jaws.
Clutch system: spring loaded ball-detent principle.
Backlash free vibration damping, elactrically isolating elastomer insert press fit into the jaw sets

Available function systems

- W = Single position / automatic re-engagement (standard)
- D = Multi-position / automatic re-engagement
- G = Load holding / load blocking
- F = Full disengagement / manual re-engagement

Product dimensions ES2

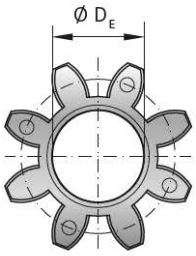

Size 5-800
elastomer insert
type A / B

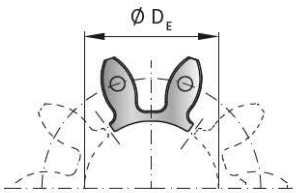

Size 1500
includes 5x elastomer
segments type A / B

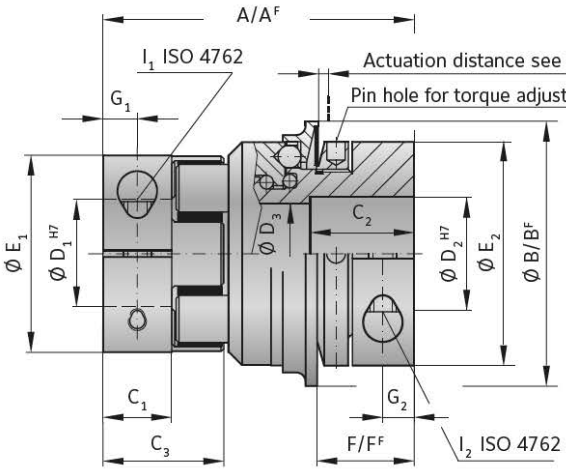

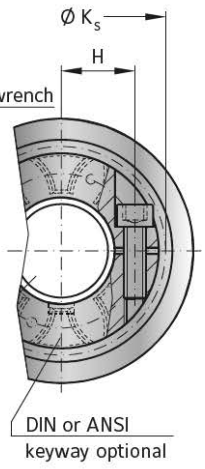

Size			5		10		20		60		150		300		450		800		1500	
Type (elastomer insert)			A	B	A	B	A	B	A	B	A	B	A	B	A	B	A	B	A	B
Rated torque	[Nm]	T_{KN}	9	12	12.5	16	17	21	60	75	160	200	325	405	530	660	950	1100	1950	2450
Max. torque	[Nm]	T_{Kmax}	18	24	25	32	34	42	120	150	320	400	650	810	1060	1350	1900	2150	3900	4900
Adjustment range	[Nm]	T_{KN}	1 - 3 3 - 6		2 - 6 4 - 12		10 - 25 20 - 40		10 - 30 25 - 80		20 - 70 45 - 150 80 - 180		100 - 200 200 - 350 300 - 500		80 - 200 200 - 350 250 - 500		400 - 650 500 - 800 600 - 900		600 - 850 700 - 1200 100 - 1800	
Adjustment range "F" version	[Nm]	$T_{KN}{}^F$	2.5 - 4.5		2 - 5 5 - 10		8 - 20 16 - 30		20 - 40 30 - 60		20 - 60 40 - 80 80 - 150		120 - 180 180 - 300		60 - 150 100 - 300 250 - 500		200 - 400 450 - 800		1000 - 1250 1250 - 1500	
Overall length	[mm]	A	50		60		86		96		106		140		164		179		245	
Adjustment range "F" version	[mm]	A^F	50		60		86		86		108		143		168		190		257	
Actuation ring Ø	[mm]	B	35		45		65		73		92		120		135		152		174	
Actuation ring Ø "F" version	[mm]	B^F	42		51.5		70		83		98		132		155		177		187	
Clamping fit length	[mm]	C_1	8		10.3		17		20		21		31		34		46		88	
Fit length	[mm]	C_2	14		16		27		31		35		42		51		45		67	
Length of hub	[mm]	C_3	16.7		20.7		31		36		39		52		57		74		120	
Bore Ø	[mm]	D_1	4 - 12.7*		5 - 16*		8 - 25		12 - 32		19 - 36		20 - 45		28 - 60		35 - 80		35 - 90	
Bore Ø	[mm]	D_2	6 - 14*		6 - 16*		12 - 30		15 - 32		19 - 42		30 - 60		35 - 60		40 - 75		50 - 80	
Inner Ø	[mm]	D_3	14.1		20.1		24.1		32.1		36.1		58.1		60.1		60.1		68.1	
Inner Ø (elastomer insert)	[mm]	D_E	10.2		14.2		19.2		26.2		29.2		36.2		46.2		60.5		79	
Hub-Ø	[mm]	E_1	25		32		42		56		66.5		82		102		136.5		160	
Hub-Ø		E_2	19		40		55		66		81		110		123		132		157	
Distance	[mm]	F	15		17		24		28		31		35		45		50		63	
Distance "F" version	[mm]	F_F	14		16		22		29		30		35		43		54		61	
Distance	[mm]	G_1	4		5		8.5		10		11		15		17.5		23		36	
Distance	[mm]	G_2	5		5		7.5		9.5		11		13		17		18		22.5	
Center distance elastomer side	[mm]	H_1	8		10.5		15		21		24		29		38		50.5		2x 57	
Screw ISO 4762		I_1	M3		M4		M5		M6		M8		M10		M12		M16		4x M16**	
Tightening torque	[Nm]		2		4.5		8		15		35		70		120		290		300	
Center distance TI side	[mm]	H_2	10		15		19		23		27		39		41		48		2x 55	
Screw ISO 4762		I_2	M4		M4		M6		M8		M10		M12		M16		2x M16		2x M20	
Tightening torque	[Nm]		4		4.5		15		40		70		130		200		250		470	
Outer Ø with screwhead	[mm]	K_s	25		32		44.5		57		68		85		105		139		155	
weight (approx.)	[kg]		0.2		0.3		0.6		1		2.4		5.8		9.3		14.3		26	
Moment of Inertia	10^{-3} [kgm^2]	J_{ges}	0.02		0.06		0.25		0.7		2.3		11		22		33.5		185	
Actuation distance	[mm]		0.8		1.2		1.5		1.7		1.9		2.2		2.2		2.2		3	

A^F. B^F. L^F = Full disengagement version * keyway with max. bore only in clamping hub possible. ** fully split clamping hub with two rows of screws.

Order code

Example:	ES2 /	60 /	A /	G /	16 /	19pfn /	20 /	10-25
	Model	Size	Elastomer insert type	Function system	Bore D_1 [mm] (for keyway attach pfn)	Bore D_2 [mm] (for keyway attach pfn)	Disengagement torque [mm]	Torque adjustment range [mm]

D_1 is generally intended as the bore for the shaft ends of the sensor.