tel. +49 (0) 79 72 93 10-0
hagstrasse 10 . D-74417 gschwend
sales@eth-messtechnik.de

Datasheet

Elastomer coupling

with fully split clamping hub

EKH

4 Nm up to 25.000 Nm |Radially mountable



Features

- Radially mountable
- Easy Installation and removal
- Good concentricity

Material

- **Hubs:** Up to size 600 high strength aluminium, size 800 steel, size 2500 and up GGG40
- **Elastomer:** wear resistant thermally stable TPU

Design

Two split clamping hubs (high concentricity) with Concave claws and two side screws each.
Clamping hub halves can be removed radially in one direction.
Size 2500 and up, the elastomer insert consists of five individual segments.

Product dimensions EKH 4 - 2150 Nm

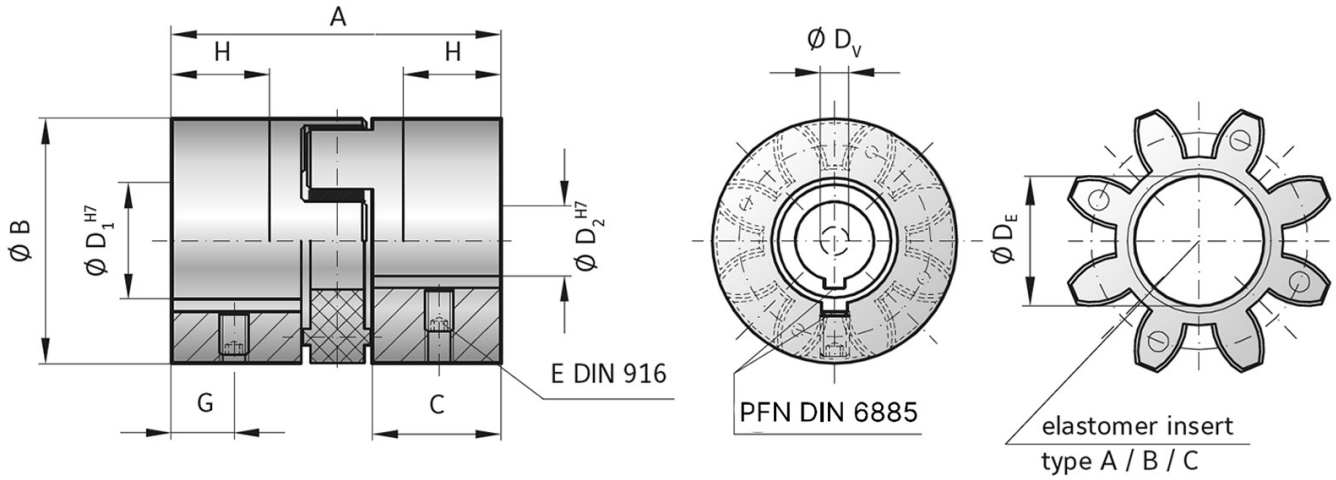

Size			10			20			60			150			300			400			450			600			800		
Type (Elastomer insert)			A	B	C	A	B	C	A	B	C	A	B	C	A	B	C	A	B	C	A	B	C	A	B	C	A	B	C
Rated torque	[Nm]	T_{KN}	12.6	16	4	17	21	6	60	75	20	160	200	42	325	405	84	410	520	90	530	660	95	700	840	150	950	1100	240
Max. torque	[Nm]	T_{Kmax}	25	32	6	34	42	12	120	150	35	320	400	85	650	810	170	820	1040	180	1060	1350	190	1400	1680	300	1900	2150	400
Overall length	[mm]	A	53			66			78			90			114			120			126			141			162		
Length of center section	[mm]	A_E	20			28.8			34			38			50			52			52			56			65		
Outer Ø	[mm]	B	32			42			56			66.5			82			95			102			120			136.5		
Outer Ø with screw head	[mm]	B_S	32			44.5			55.7			68			85			98			105			122			139		
Mounting length	[mm]	C	20			25			30			35			45			47			50			55			65		
Bore-Ø	[mm]	D_1/D_2	6 - 16			8 - 25			12 - 32			19 - 36			20 - 45			25 - 50			28 - 60			30 - 70			35 - 80		
Max. inner-Ø (Elastomer insert)	[mm]	D_E	14.2			19.2			26.2			29.2			36.2			43			46.2			55			60.5		
Screw ISO 4762		E	4 x M4			4 x M5			4 x M6			4 x M8			4 x M10			4 x M12			4 x M12			4 x M12			4 x M16		
Tightening torque	[Nm]		4			8			15			35			70			120			120			120			290		
Center distance	[mm]	F	10.5			15.5			21			24			29			33.5			38			47			50.5		
Distance	[mm]	G	7.5			8.5			10			12			15			16			17.5			20			23		
Hub length	[mm]	H	31			39			46			52.5			66			73			73			83			93.5		
Moment of inertia per hub	10^{-3} [kgm²]	J_1/J_2	0.005			0.02			0.06			0.1			0.55			1.11			1.6			3.45			18.5		
Weight (approx.)	[kg]		0.08			0.15			0.35			0.6			1.2			1.57			2.1			3.22			14.8		
Rpm standard	10^3 [min⁻¹]		13			12.5			11			10			9			8.5			8			6.8			4		
Rpm balanced	10^3 [min⁻¹]		53	63	40	45	60	35	31	31	25	22	26	18	22	26	16	17	18	13	16	17	12	14	14	10	13	13	8

Product dimensions EKH 1950 - 25,000 Nm

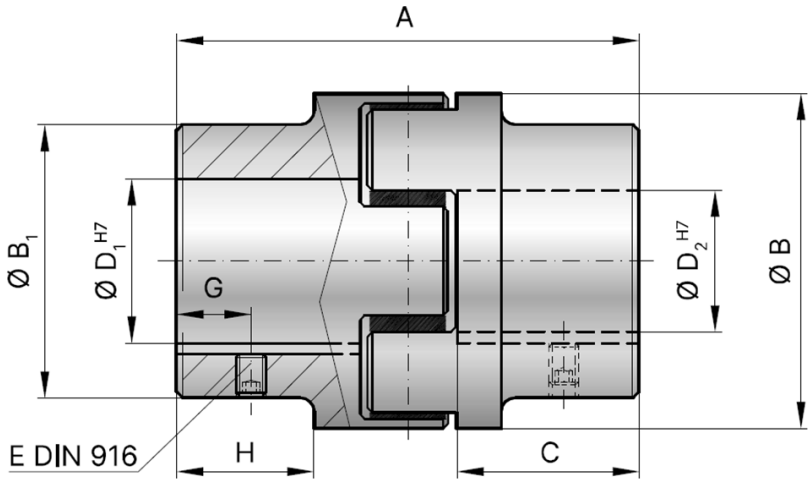

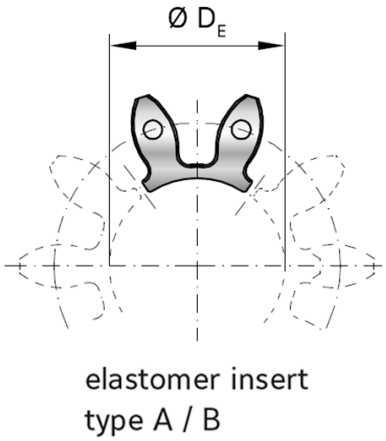

Size			2500		4500		9500	
Type (Elastomer insert)			A	B	A	B	A	B
Rated torque	[Nm]	T_{KN}	1950	2450	5000	6200	10,000	12,500
Max. torque	[Nm]	T_{Kmax}	3900	4900	10,000	12,400	20,000	25,000
Overall length	[mm]	A	213		272		341	
Length of center section	[mm]	A_E	78		104		131	
Outer Ø	[mm]	B	160		225		290	
Outer Ø with screw head	[mm]	B_S	156		199		243	
Mounting length	[mm]	C	85		113		140	
Bore-Ø	[mm]	D_1/D_2	35 - 90		40 - 120		50 - 140	
Max. inner-Ø (Elastomer insert)	[mm]	D_E	80		111		145	
Screw ISO 4762		E	8 x M16		8 x M20		8 x M24	
Tightening torque	[Nm]		300		600		1100	
Center distance	[mm]	F	57		75		90	
Distance	[mm]	G	18		24		30	
Distance	[mm]	G_1	30		41		48	
Hub length	[mm]	H	120		154		193	
Hub length	[mm]	H_1	69		154		110	
Moment of inertia per hub	10^{-3} [kgm²]	J_1 / J_2	40		147		480	
Weight (approx.)	[kg]		12.5		25		53	
Rpm standard	[min⁻¹]		3000		3500		2000	
Rpm balanced	[min⁻¹]		10,000	10,000	8000	8000	6500	6500

Order code

Example:	EKH	/	60	/	A	/	19	/	24pfn
	Model		Size		Elastomer insert type		Bore D_1 [mm] (without keyway omit pfn)		Bore D_2 [mm] (without keyway omit pfn)

D_1 is generally intended as the bore for the shaft ends of the sensor.