tel. +49 (0) 79 72 93 10-0
hagstrasse 10 . D-74417 gschwend
sales@eth-messtechnik.de

Datasheet

Torque sensor

DRW-K

19 torque ranges from 0.5 Nm up to 20,000 Nm
non rotating
active or passive version



Features

- fixed cable
- integrated 100% control
- universally applicable
- no maintance or wear
- parallel key optional

This torque sensor is designed for non-rotating applications.
Both static and dynamic measurements are possible.

The strain-gauge-based sensor outputs a standardized output signal in mV/V that is proportional to the torque.
Also available as an active version when combined with the „DMSVE“ amplifier unit.

Mechanical dimensions DRW-K

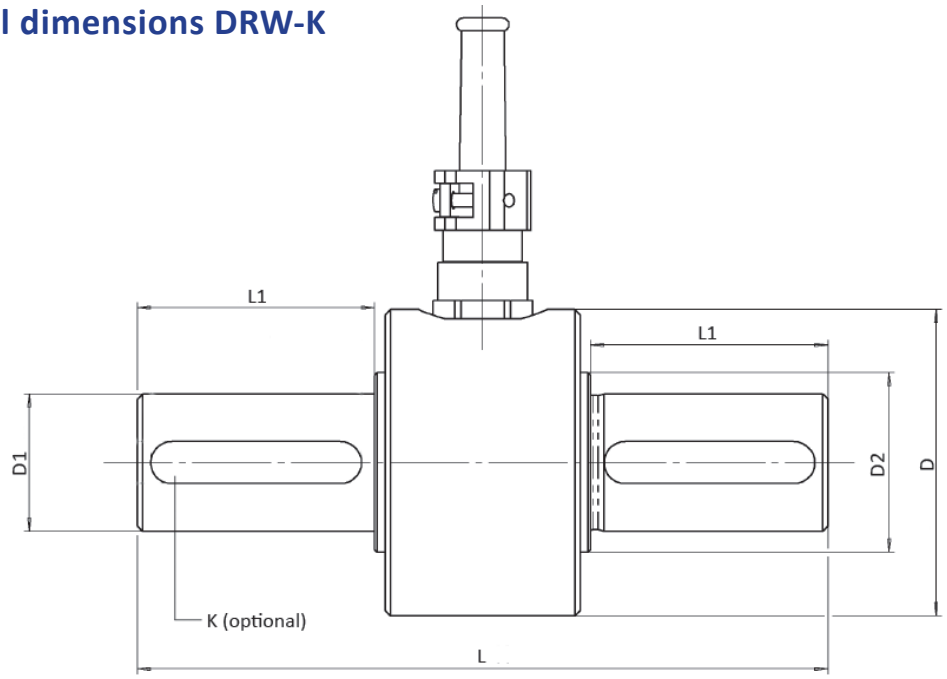

torque ranges: (0-...)		L [mm]	L1 [mm]	D [mm]	D1 g6 [mm]	D2-0,1 [mm]	K (DIN 6885)
0.5 | 1	[Nm]	47	10	24	8	12	-
2 | 5 | 10	[Nm]	58	12	38	12	18	2x A - 4 x 4 x 8
15 | 20	[Nm]	74	20	38	12	18	2x A - 4 x 4 x 16
50	[Nm]	104	35	50	18	26	2x A - 6 x 6 x 28
100 | 200	[Nm]	131	45	58	26	34	2x A - 8 x 7 x 40
500 | 1000 | 1500	[Nm]	168	60	77	45	58	–
2 | 3 | 4 | 5	[kNm]	264	110	98	70	–	–
10 | 15 | 20	[kNm]	285	115	138	110	–	–

general tolerances according to DIN 2768-m

Electrical data DRW-K

	(a) active	(p) passive
Supply voltage:	12 - 30 V DC	12 V DC ± 10 %
Current consumption:	60 - 100 mA	35 mA max.
Rise time 10-90 %:	120 µs	--
Limit frequency -3 dB:	3 kHz	--
Output signal:	0 ± 10 V	1 mV/V (± 0,25 %)
Error of Nonlinearity:	0.1 %	
Error ofHysteresis:	0.1 %	
Devitation at zero point:	≤ 100 mV	≤ ± 0.01 mV/V
Internal resistance:	--	350 Ω nominal
Compensated temperature range:	5 - 45 °C	
Operating temperature:	0 - 60 °C	
Temperature error Zero point: Sensitivity:	 0.02 % /K 0.01 %/K	
Mechanical overload:	100 %	
Internal protection:	IP40	
Connection:	free cable end	
Cable lenght:	2.5 m; amplifier mounted in the housing 50 cm from the end of the cable	2.5 m
Calibration: works certificate with 25% steps in right and left-hand load. (Other calibrations on request!)		

Mechanical data DRW-K

Torgue range (0 - ...) [Nm]	Spring constant [Nm/rad]	Max. axial load [N]	Max radial load [N]
0.5	90	830	8
1	205	1320	15
2	300	2970	25
5	870	5180	60
10	2110	8600	130
15	3350	11,700	165
20	4380	14,200	225
50	16,200	26,000	410
100	37,800	41,700	650
200	82,700	64,500	1230
500	384,000	121,000	3040
1000	810,000	193,000	6080
1500	1,037,000	230,000	7840
2000	2,171,000	297,000	7040
3000	3,196,000	386,000	10,400
4000	4,130,000	472,000	14,100
5000	4,895,000	550,000	17,700
10,000	12,330,000	860,000	31,700
15,000	18,200,000	1,143,000	48,600
20,000	22,740,000	1,389,000	65,100

Ordering code

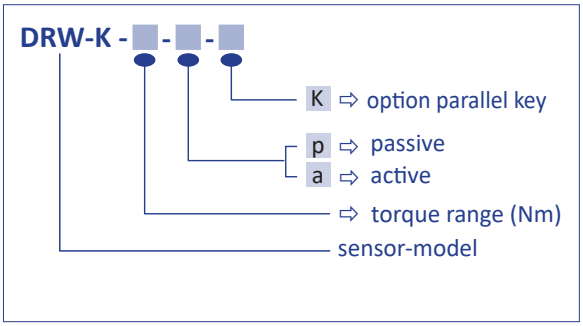

Available accessories

supply and display unit: GMV2
ValueMaster$_{base}$*
ValueView*

couplings

* only in version „a“ (active)