tel. +49 (0) 79 72 93 10-0
hagstrasse 10 . D-74417 gschwend
sales@eth-messtechnik.de

Datasheet

Torque sensor

DRVZ

**1800 Nm max. on 1⅜“ shaft
according to ISO 500-3:2014 Type 1**

for drives with PTO shafts

**angle of rotation measurement
with 2x360 increments**

New!



On request also available:

**1800 Nm max. on 1⅜“ shaft
according to ISO 500-3:2014 Type 2**

**2500 Nm max. on 1¾“ shafts
according to ISO 500-3:2014 Type 3**

Features DRVZ

- contactless signal transmission
- built-in measuring amplifier
- rotation angle measurement (optional)
- extended EMC strength
- adjustable output level of rpm and angle signal (5V-24V)
- Frequency output 10kHz ±5kHz
- large input voltage range (10-28.8V)
- strain gauge technology
- robust design for use in field applications
- IP67
- easy installation
- accurate results (0.2% accuracy)

The torque sensor DRVZ provides a precise measurement of torque and angle of rotation when testing systems that are driven by PTO shafts, such as a tractor gearbox.

The contactless transmission of supply voltage and measuring signal enables low-wear and largely maintenance-free continuous operation.
The integrated measuring amplifier provides an analog and galvanically isolated output signal of 0 ± 10V or 10kHz ±5kHz with a supply voltage of 10 to 28.8V DC.

Electrical specifications DRVZ

Supply voltage:	10 - 28.8 V DC	
Power consumption:	at Ub 12 V approx. 180 mA (switching converter 2.2 W)	
Rise time 10-90 %:	400 µs	
Limit frequency -3 dB:	1 kHz	
	Voltage output:	Output frequency:
Output signal:	0 ± 10 V	10 kHz ± 5 kHz
Resolution:	16 bit ≙ 0.38 mV	16 bit ≙ 0.19 mHz
Max. output range:	± 11 V	± 6.3 KHz
Internal resistance:	100 Ω	–
Ripple:	< 100 mVpp	–
Nonlinearity/max. measurement error (of full scale)	0.2%	0.2%
Error of Hysteresis:	0.1 %	0.1 %
Deviation at zero point:	≤ 50 mV	≤ 50 Hz
Operating temperature:	0 - 60 °C	
Compensated temperature range:	5 - 45 °C	
Temperature error		
Zero point:	0.05 % / K	
Sensitivity:	0.05 % / K	
Mechanical overload:	50 %	
Internal protection:	IP67	
Connection:	12pin-connector (circular connector series 680)	

Interference emission

Basic standard	Frequency range
EN55011 Limit class B	150 kHz - 6 GHz

Immunity to interference

Basic standard	Testing accuracy	coupling	Result
EN61000-4-2:2009 Electrostatic discharge (ESD)	4 kV	direct	A
EN61000-4-2:2009 Electrostatic discharge (ESD)	4 kV	indirect	A
EN61000-4-3:2009 Electromagnetic fields	10 V/m	indirect	A
EN61000-4-4:2009 Bursts	2 kV	indirect	A
EN61000-4-5:2005 Surge voltages	1 kV	direct	B
EN61000-4-6:2009 Conductor-borne RF disturbances	10 V/m	indirect	A
EN61000-4-8:2005 Power frequency magnetic fields	30 A/m	indirect	A

A: Deviation of outputs during the test < 0.3 % of full scale
B: Deviation of outputs during the test > 0.3 % of full scale

	Angle (w)
Output:	TTL or over voltage on pin 5 V < U < 24 V
Impedance:	22 Ω
I_{max}:	20 mA
Increments/rev.:	2 x 360
Resolution:	1°
Phase shift:	Channel A 90° leading at clockwise spin of propulsion side

Mechanical specifications DRVZ

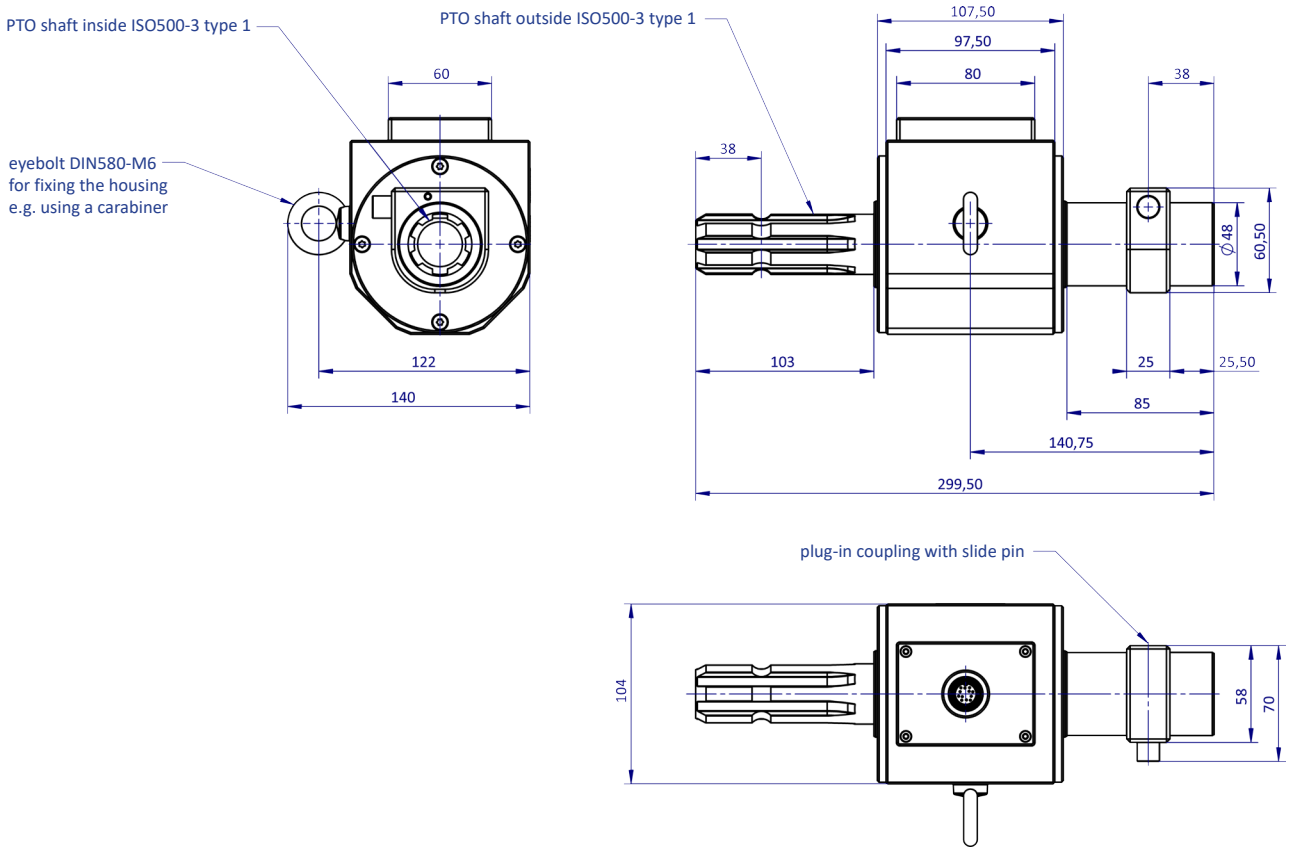

Measuring range:	0 - 1800 Nm
Max. RPM	max. 2000 min^{-1}
Spring constant:	347 x 10^3 Nm / rad
Mass moment of inertia:	7399 g x cm^2
Permissible axial load*	1300 N
Permissible radial load*	5200 N
Weight:	6kg
*** The axial and radial load values apply to the non-fixed housing**	

DRVZ-■-■-■

W ⇨ Angle
⇨ Type
⇨ Measuring range

Available accessories

Supply and display unit: GMV2
ValueMaster$_{base}$

ETH Measuring cable: AK12.4 with IP67
AK12.5 with IP67