tel. +49 (0) 79 72 93 10-0
hagstrasse 10 . D-74417 gschwend
sales@eth-messtechnik.de

Datasheet

Reaction Torque Transducer

DRT

Torque ranges from 2 to 6000 Nm
for static applications
active or passive-model

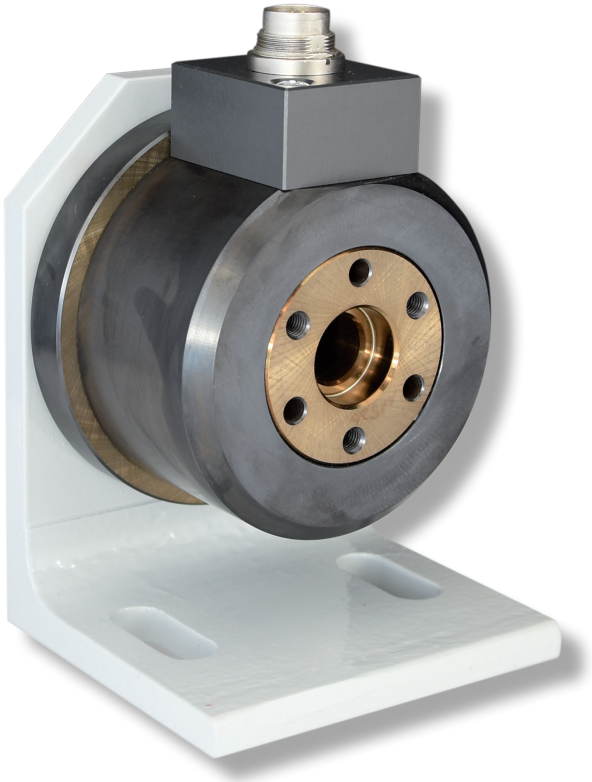

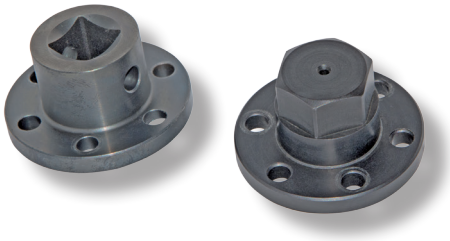

Features

- suitable for impulse screwdrivers
- side load insensitive
- permanently mountable
- exchangeable adapters
- integrated chip for sensor detection
- in connection with evaluation unit GMV2
- for screwing simulator

Suitable for

- testing pulsed tools
- torque wrenches
- electric screwdrivers

This transducer was developed for static testing of pulsed tools, torque wrenches, electric screwdrivers, etc. In combination with the universal torque meter GMV2 a torque wrench can be tested without falsifying the result by excessively tightening the wrench.

The transducer can be mounted in any position with the help of the flange bracket to suit the tool to be tested. A variety of adapters are available for accepting the tool so that the tool can be tested with or without a socket. The device shaft is fitted with strain gages. It is not impacted by lateral loading because of the arrangement of the strain gages and an additional ball bearing.

Technical Specifications DRT

Model:	active	passive
Torque ranges: (Nm)		
DRT1	| 2 | 5 | 10 | 12 | 20 |	| 2 | 5 | 10 | 12 | 20 |
DRT2	| 50 | 100 | 200 | 300 |	| 50 | 100 | 200 | 300 |
DRT3	| 500 | 1000 | 2000 | 3000 |	| 500 | 1000 | 2000 | 3000 |
DRT4	| 4000 | 5000 | 6000 |	| 4000 | 5000 | 6000 |
Supply voltage:	12 V DC ± 10 %	12 V max.
Power consumption:	60 - 100 mA	35 mA max.
Rise time 10-90 %:	120ms	--
Limit frequency -3 dB:	3kHz	--
Voltage output:	0 to ± 5 V	DRT1 + DRT2 1 mV/V DRT3 + DRT4 2 mV/V
Nonlinerarity:	DRT1 +2 0,1 % DRT3 + 4 0,15 %	0,1 % 0,15 %
Hysteresis:	0,1 %	0,1 %
Deviation at zero point:	≤ ± 100 mV	≤ ± 0,01 mV/V
Internal resistance:	---	350 Ω nominal
Operating temperature:	0 - 60 °C	0 - 60 °C
Compensated temperature range:	5 - 45 °C	5 - 45 °C
Temperature error Zero point: Sensitivity:	 0,02 % / K 0,01 % / K	 0,02 % / K 0,01 % / K
Internal protection:	IP 40	IP 40
Connection:	12pin-connector	6pin-connector

Model	DRT1	DRT2	DRT3	DRT4
Weigth with mounting bracket approx.[kg]	0,7	1,6	5,6	23
Weigth without mounting bracket approx.[kg]	1,8	2,8	17	52

Model	Torque range (±0 - ...) [Nm]	Spring constant [Nm/rad]	Mass moment of inertia [g • cm²]	Rated axial load [N]	Rated radial load [N]	Overload capacity
DRT1	2	170	795	175	290	100 %
	5	570	795	330	290	100 %
	10	1390	795	510	290	100 %
	12	1590	795	550	290	100 %
	20	3610	800	820	290	100 %
DRT2	50	14 x 10^3	780	2040	430	100 %
	100	33 x 10^3	790	2830	430	100 %
	200	85 x 10^3	820	4070	430	100 %
	300	137 x 10^3	860	5150	430	100 %
DRT3	500	63 x 10^3	18,6 x 10^3	4070	8150	50%
	1000	171 x 10^3	18,8 x 10^3	6790	8150	50%
	2000	450 x 10^3	19,3 x 10^3	11.300	8150	50%
	3000	710 x 10^3	19,8 x 10^3	14.310	8150	50%
DRT4	4000	970 x 10^3	330 x 10^3	17.670	27.000	50%
	5000	1,3 x 10^6	330 x 10^3	20.610	27.000	50%
	6000	1,6 x 10^6	330 x 10^3	23.370	27.000	50%

Mechanical Dimensions DRT1

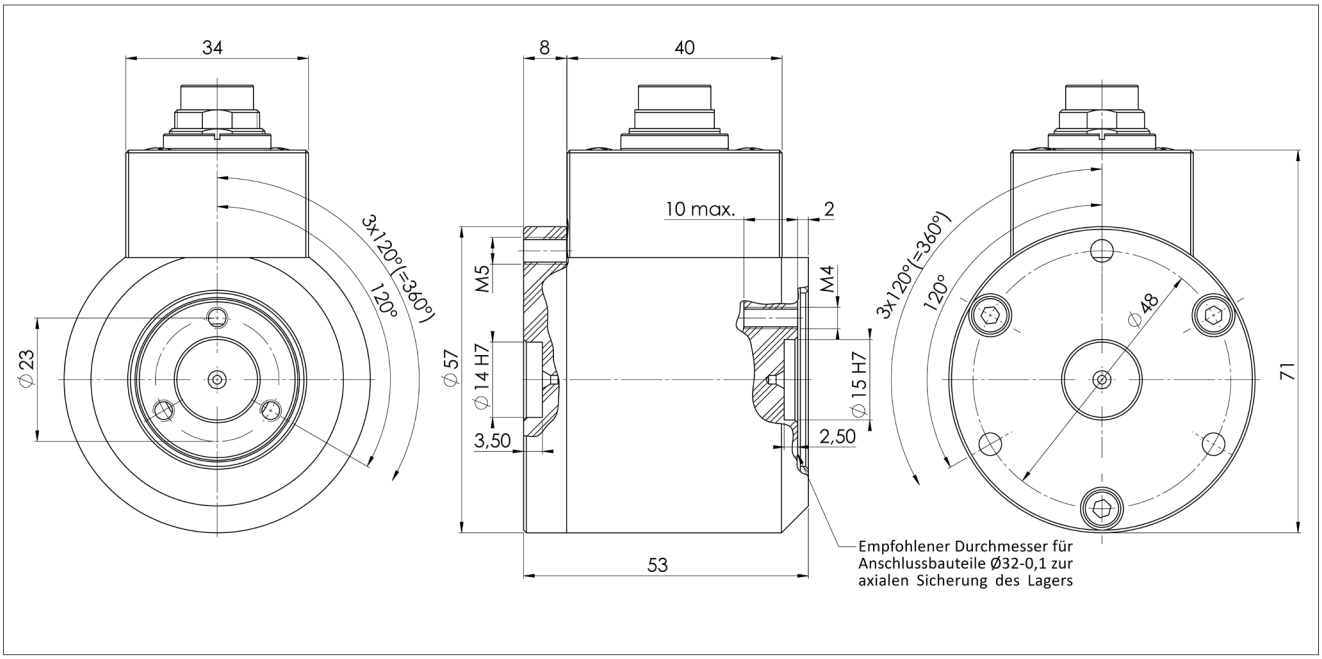

Mechanical Dimensions DRT1 with Mounting Bracket

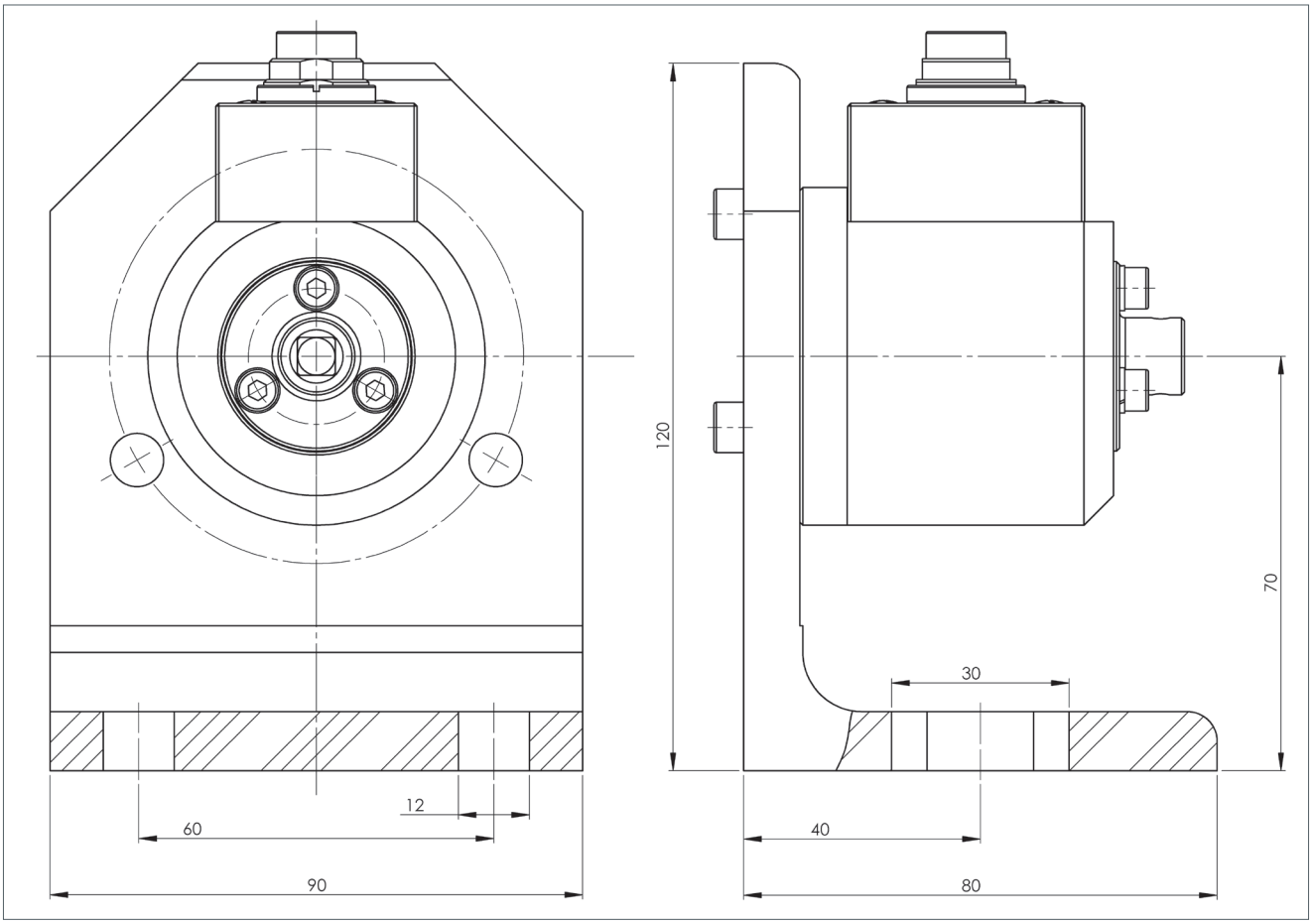

Mechanical Dimensions DRT2

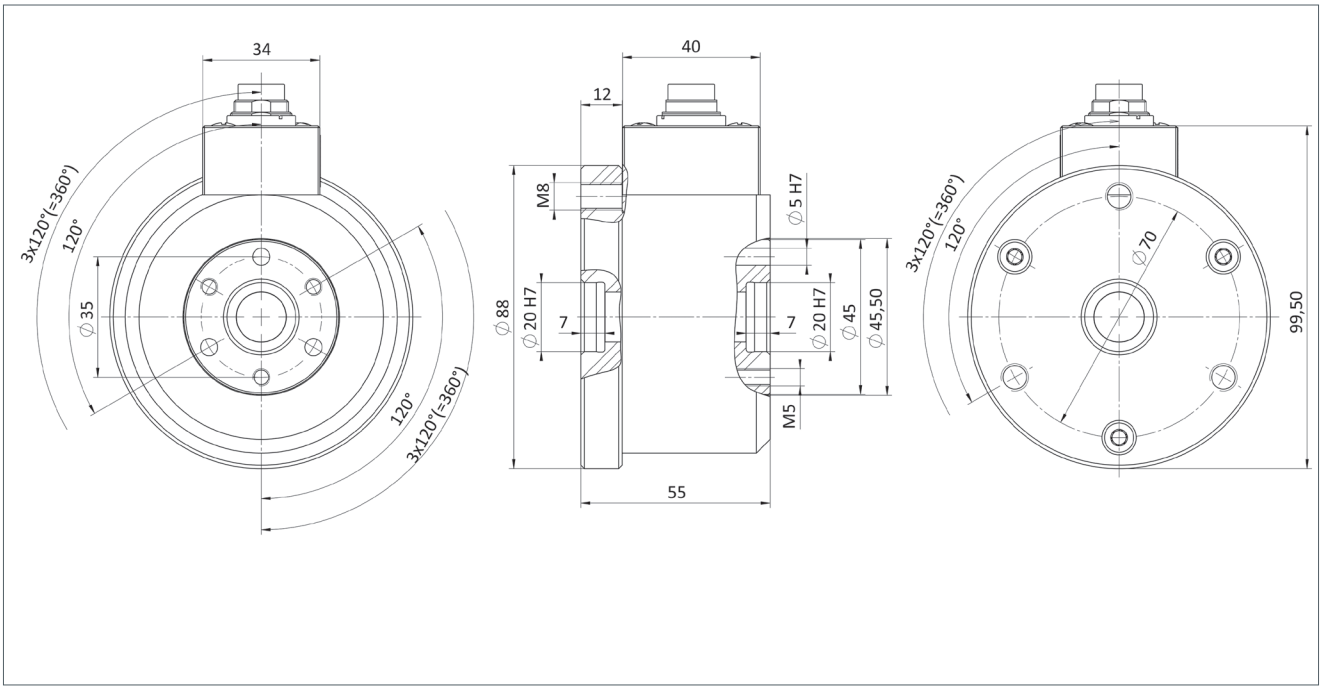

Mechanical Dimensions DRT2 with Mounting Bracket and Adapter

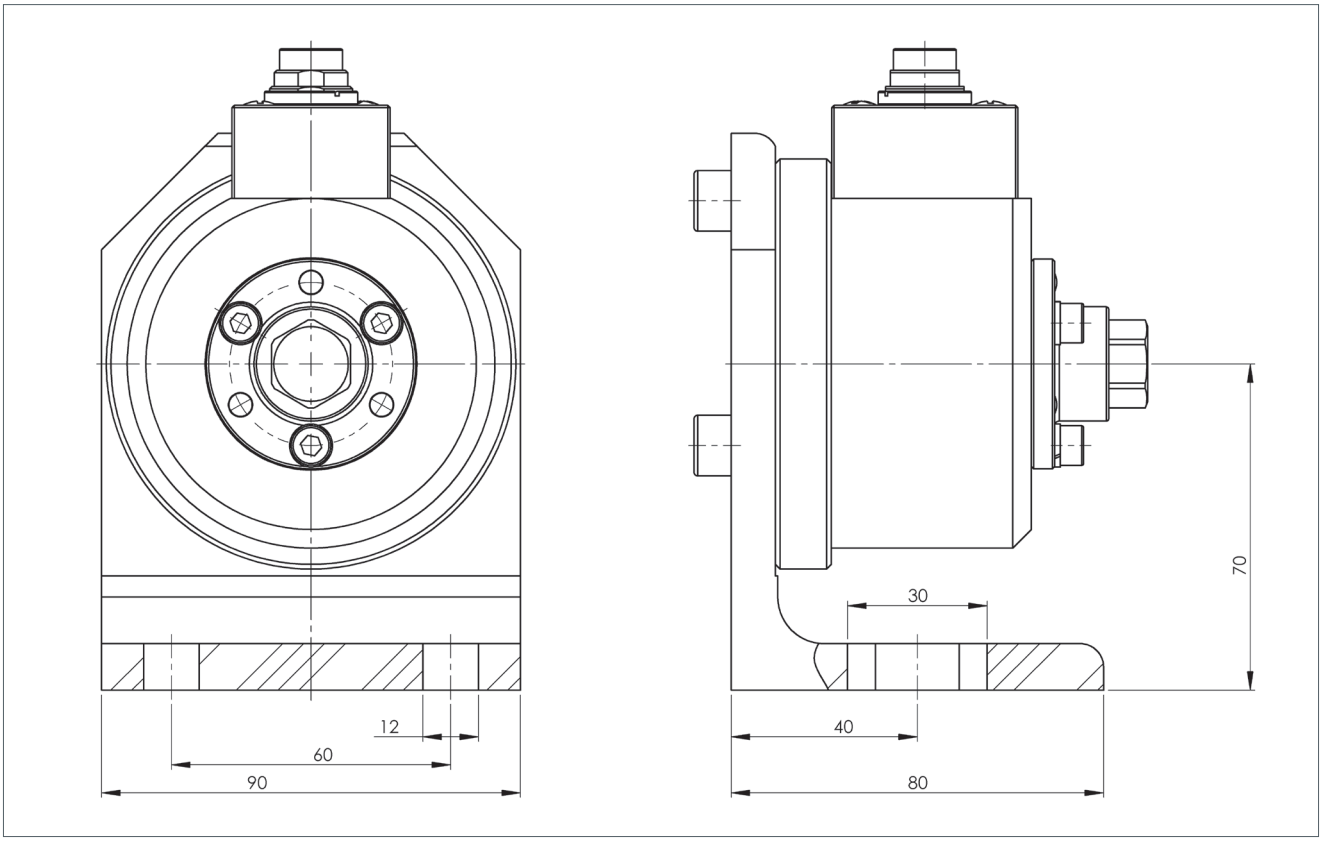

Mechanical Dimensions DRT3

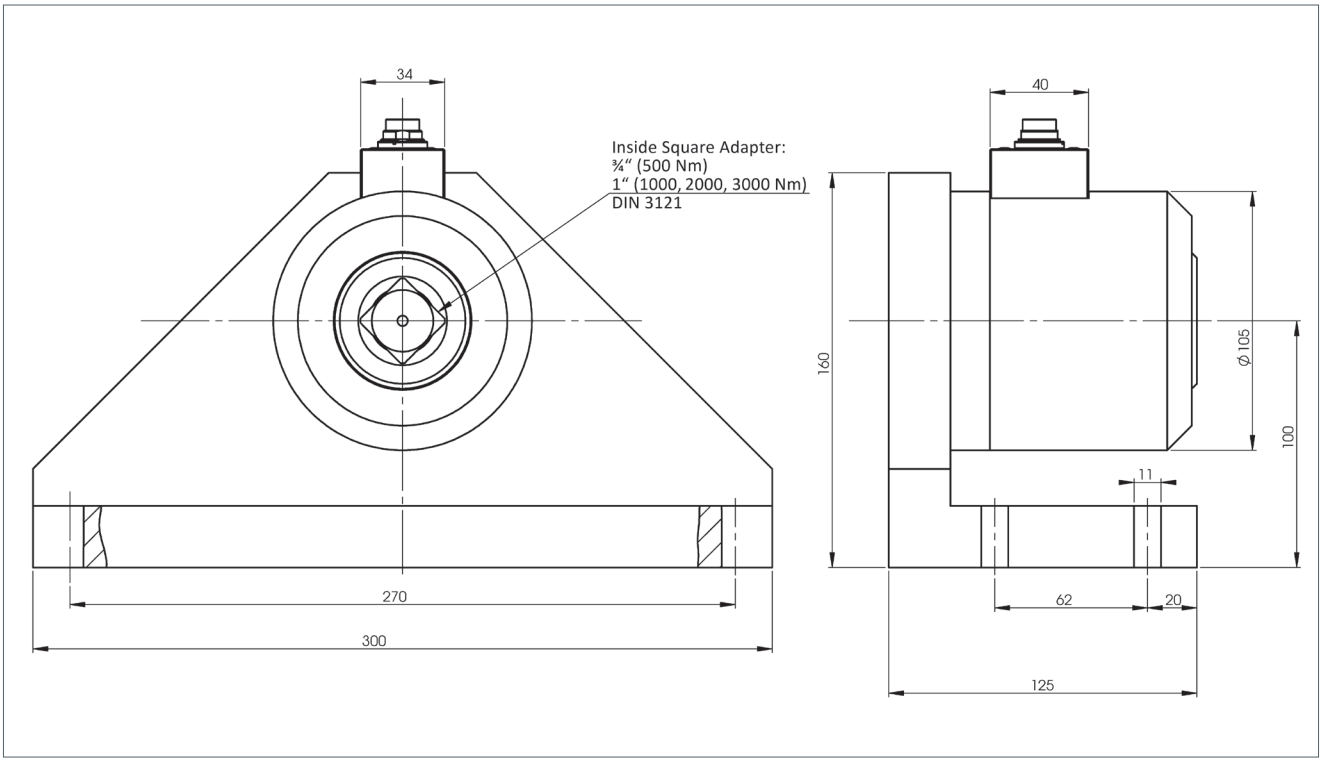

Mechanical Dimensions DRT4

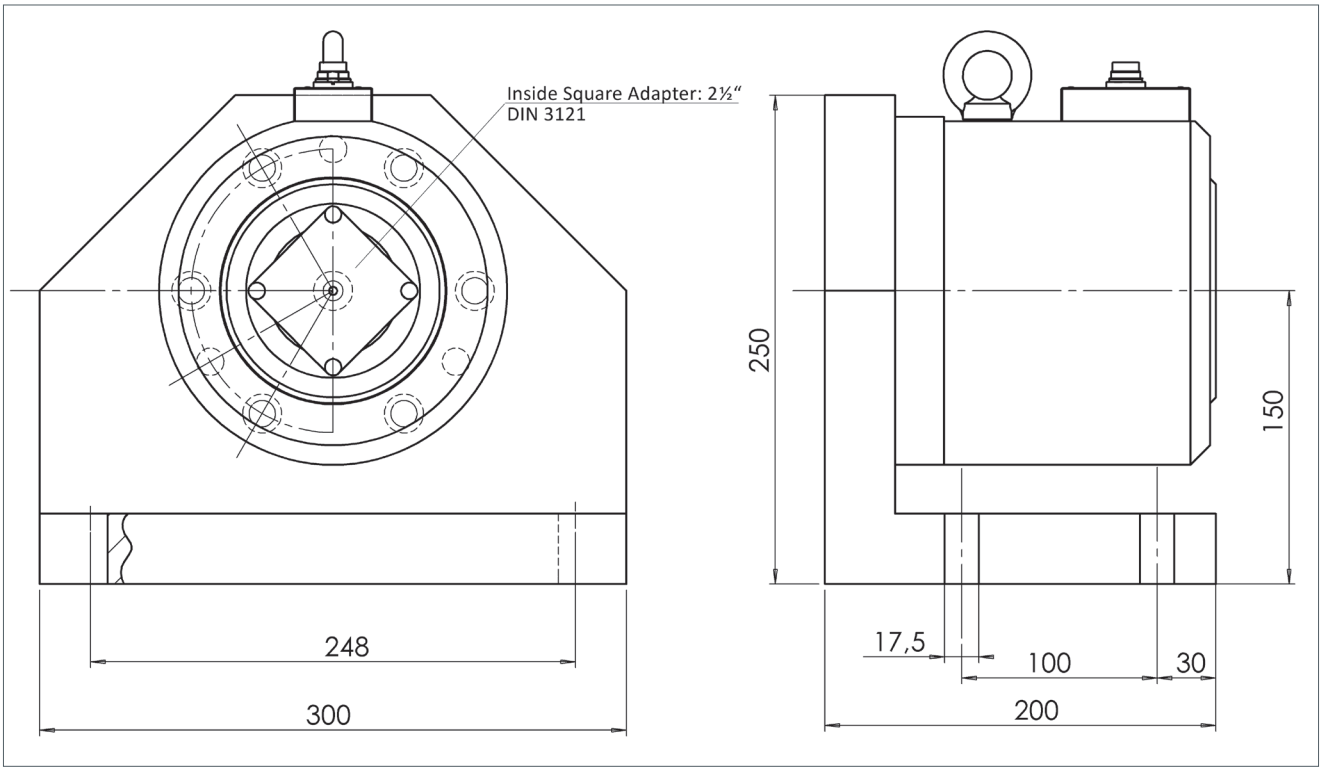

Ordering Code

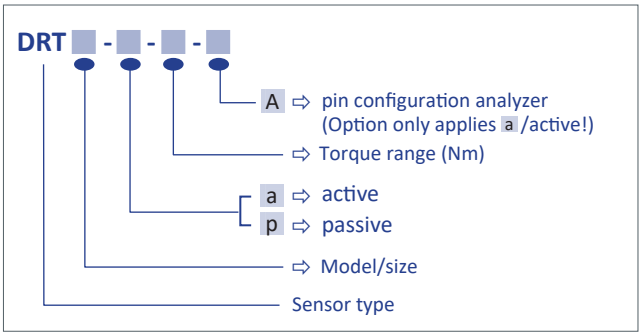

Ordering Code Accessories DRT1

DRT1-Mounting Bracket
Hexagon Adapter DIN ISO 272:
DRT1 - SW 5,5
DRT1 - SW 7
DRT1 - SW 8
DRT1 - SW 10
DRT1 - SW 13
Inside Square Adapter:
DRT1 - 1/4“ DIN 3121-H
DRT1 - 1/4“ DIN 3121-without keyway

Ordering Code Accessories DRT2

DRT2-Mounting Bracket	
Hexagon Adapter DIN ISO 272:	
DRT2 - SW 13	DRT2 - SW 14
DRT2 - SW 15	DRT2 - SW 16
DRT2 - SW 17	DRT2 - SW 18
DRT2 - SW 19	DRT2 - SW 20
DRT2 - SW 21	DRT2 - SW 22
Inside Square Adapter:	
DRT2 - 1/4“ DIN 3121-H	
DRT2 - 3/8“ DIN 3121-H	
DRT2 - 1/2“ DIN 3121-H	
DRT2 - 1/4“ DIN 3121 without keyway	
DRT2 - 3/8“ DIN 3121 without keyway	
DRT2 - 1/2“ DIN 3121 without keyway	

Ordering Code Accessories DRT3

DRT3-Mounting Bracket
Inside Square Adapter:
DRT3 - 1“ - 3/4“

Ordering Code Accessories DRT4

DRT4-Mounting Bracket

More Accessories

Cables

Analycers

Screwing Simulators