tel. +49 (0) 79 72 93 10-0
hagstrasse 10 . D-74417 gschwend
sales@eth-messtechnik.de

Datasheet

Torque Transducer

DRFDN
DRFDS

Torque ranges from 0,5 to 5 Nm

with digital output

option angle function



standard square drive

standard hex drive

Features

- No service needed because of contactless data acquisition
- High accuracy due to frequency modulation and strain gage technology
- reduced power consumption
- High noise immunity due to digital signal
- very compact design

suitable for:
automotive industry
test benches
assembly applications
pulsed tools

The transducer is suitable for use in the laboratory and for the industrial environment due to its compact dimensions. The non-contact transmission of supply voltage and measuring signal enables low-wear and maintenance-free continuous operation. The integrated measuring amplifier delivers a digital output signal of 8 kHz ± 2 kHz with a supply voltage of 12V DC.

Electrical Specifications DRFD

Torque ranges:	0,5 | 1 | 2 | 5 Nm
Supply voltage:	12 V DC ± 10 %
Current consumption:	< 150 mA
Frequency output:	8 kHz ± 2 kHz
Level:	8 V
Accuracy:	0,25 % of full scale
Nonlinearity:	< 0,15 %
Hysteresis:	< 0,1 %
Operating temperature:	0 - 60 °C
Compensated temperature range:	5 - 45 °C
Temperature error	
Zero point:	0,02 % / K
Sensitivity:	0,01 % / K
Mechanical overload:	100 %
Internal protection:	IP40
max rev.:	10.000 min $^{-1}$
Weight:	approx. 180 g
Connection:	8pin-connector

Calibration: Factory certificate with 25% steps cw. Other calibrations on request.

Angle option (w)	
max rev.:	3000 min $^{-1}$
Output:	open-collector
Internal pull up	10 kΩ (5 V level)
External pull up	24 V max
I max:	20 mA
Pulses / rev.:	360
Resolution:	1°

Detection of direction of rotation:

2 pulses 90° phase shift

Channel A leading for clockwise rotation of drive end

Ordering Code

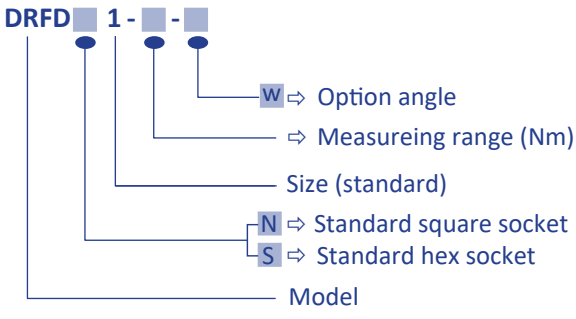

Accessories

external D / A converter for analog signal,
supply and evaluation device GMV2,

Cable 2m

Mechanical Dimensions DRFD

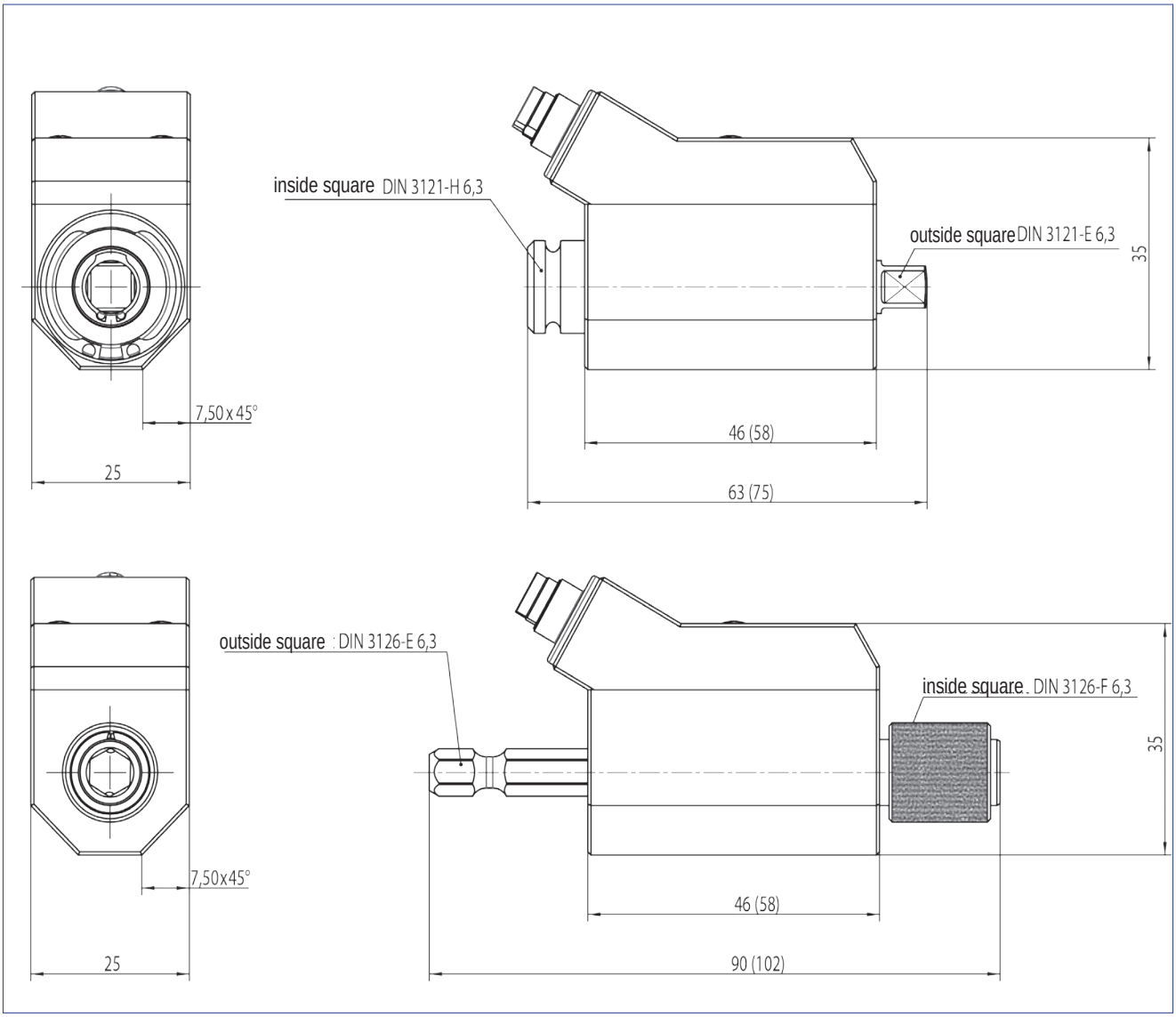

In brackets dimensions with option rotation angle. / General tolerances DIN 2768-m.