tel. +49 (0) 79 72 93 10-0
hagstrasse 10 . D-74417 gschwend
sales@eth-messtechnik.de

Datasheet

Torque sensor

DRDML 0,5 Nm - 20 Nm
DRDMS 0,5 Nm - 20 Nm
DRDMN 10 Nm - 50 Nm



With mechanical coupling for maxon gears
With contactless data acquisition
As a complete drive and torque measuring unit

Test bench construction
Bolting technology

Electrical specifications

Supply voltage:	12 V DC ± 10 %
Power consumption:	approx. 120 mA
Rise time 10-90 %:	1 ms (1 kHz)
Voltage output:	0 ± 10 V
Internal resistance:	100 Ω
Ripple:	< 100 mVpp
Nonlinearity:	< 0,15 %
Hysteresis:	< 0,1 %
Deviation on zero point:	≤ ± 100 mV
Operating temperature:	0 - 60 °C
Compensated temperature range:	5 - 45 °C
Temperature error	
Zero point:	0,02 %/K
Sensitivity:	0,01 %/K
Mechanical overload:	100 %
Connection:	2,5 m connection cable with flying leads
Calibration: Works certificate with 25% steps cw and ccw. Other calibrations upon request.	

Mechanical dimensions DRDML; cylindrical shaft ends

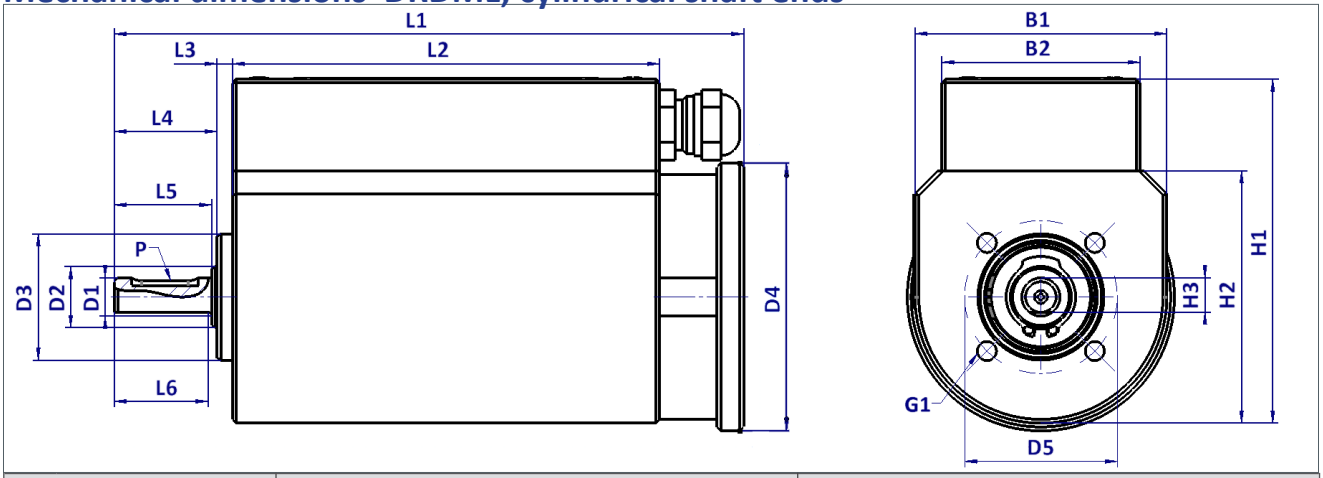

Type		DRDML-26 *	DRDML-42
Suitable for gearbox		GP26B	GP42C
Torque ranges [Nm]		0,5 | 1 | 2	5 | 10 | 15 | 20
Dimensions [mm]			
L1		82,5	116,4
L2		56	72
L3		2	3
L4		13,5	28,4
L5		12,8	18
L6		12,3	---
B1		33	45
B2		26	45
H1		46	62
H2		33	---
H3	-0,1	4,5	---
D1	g6	5	10
D2		8	15
D3	-0,05	16,5	32
D4		35	48,5
D5	±0,1	20	38
G1		M3 x 5 deep	M4 x 6 deep
P (DIN 6885)		---	A3 x 3 x 14
other ranges upon request; general tolerances DIN 2768-m			
Weight approx. [g]		160	600
*additional electronics integrated in the measuring cable			

Technical specifications DRDML

Type	Spring constant [Nm/rad]	Mass moment of inertia [g•cm²]	Rated axial load [N]	Rated radial load [N]	max. rpm [1/min]
DRDML-26-0,5	110	1,3	190	6	25.000
DRDML-26-1	110	1,3	190	6	25.000
DRDML-26-2	250	1,3	190	12	25.000
DRDML-42-5	860	149	565	85	10.000
DRDML-42-10	1940	149	565	171	10.000
DRDML-42-15	2880	149	565	253	10.000
DRDML-42-20	3725	150	565	340	10.000

Mechanical dimensions DRDMS; hexagon standard

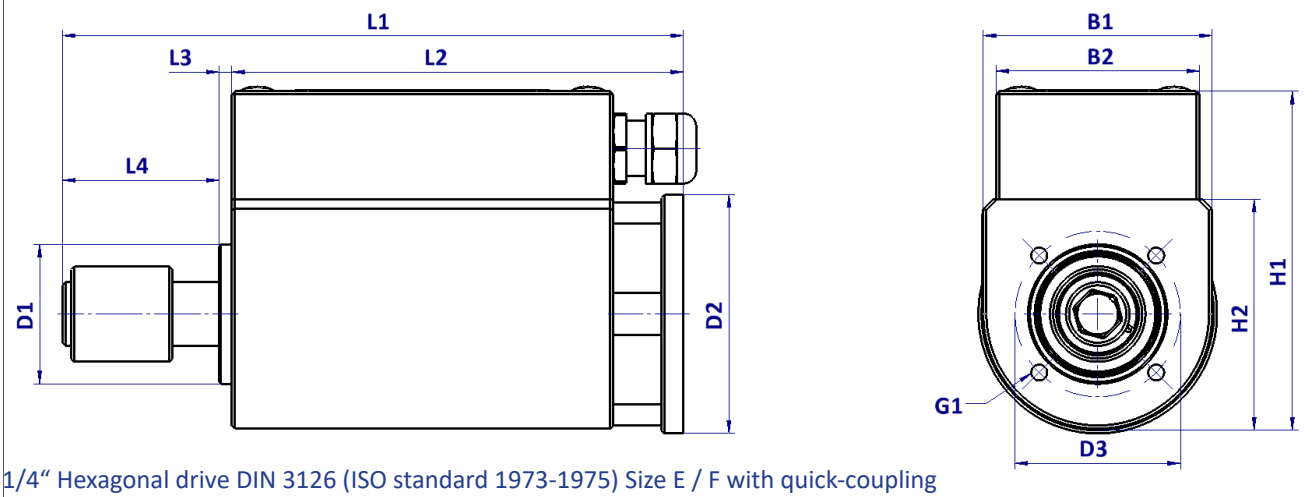

1/4“ Hexagonal drive DIN 3126 (ISO standard 1973-1975) Size E / F with quick-coupling

Type		DRDMS-22 *	DRDMS-32	DRDMS-42
Suitable for gearbox		GP22A	GP32A	GP42C
Torque ranges [Nm]		0,5 | 1	1 | 2 | 5	5 | 10 | 15 | 20
Dimensions [mm]				
L1		100	97,6	112,9
L2		55	60	72
L3		2	2	3
L4		34	24,6	24,9
B1		28	36	45
B2		22	32	45
H1		40	53	62
H2		28	36	---
D1	-0,05	19	21,9	32
D2		33	37,5	48,5
D3	±0,1	14	26	38
G1		M2 x 3 deep (3 x 180°)	M3 x 5 deep	M4 x 6 deep
other ranges upon request; general tolerances DIN 2768-m				
Weight approx. [g]		140	250	490
*additional electronics integrated in the measuring cable				

Technical Specifications DRDMS

Type	Spring constant [Nm/rad]	Mass moment of inertia [g•cm²]	Rated axial load [N]	Rated radial load [N]	max. rpm [1/min]
DRDMS-22-0,5	90	0,5	90	6	25.000
DRDMS-22-1	90	0,5	90	6	25.000
DRDMS-32-1	270	5	230	8	20.000
DRDMS-32-2	270	5	230	8	20.000
DRDMS-32-5	700	5	230	20	20.000
DRDMS-42-5	880	60	320	20	10.000
DRDMS-42-10	2050	60	320	38	10.000
DRDMS-42-15	3100	60	320	55	10.000
DRDMS-42-20	4100	60	320	75	10.000

Mechanical dimensions DRDMN; square standard

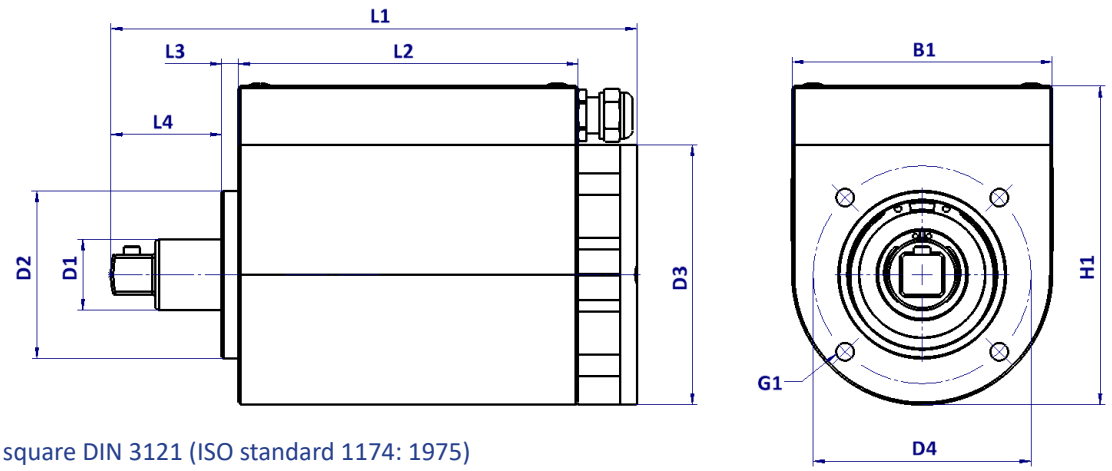

External square DIN 3121 (ISO standard 1174: 1975)

Type		DRDMN-62
Suitable for gearbox		GP62
Output square		3/8“
Torque ranges [Nm]		10 | 20 | 50
Dimensions [mm]		
L1		125,4
L2		81
L3		4
L4		26,4
H1		62
b1		76
D1		17
D2	-0,05	40
D3		62
D4	±0,1	52
G1		M5 x 10 deep
other ranges upon request; general tolerances DIN 2768-m		
Weight approx. [g]		870

Technical specifications DRDMN

Type	Spring constant [Nm/rad]	Mass moment of inertia [g•cm²]	Rated axial load [N]	Rated radial load [N]	max. rpm [1/min]
DRDMN-62-10	2200	130	1300	35	10.000
DRDMN-62-20	4300	130	1300	70	10.000
DRDMN-62-50	8000	130	1300	190	10.000

Ordering code

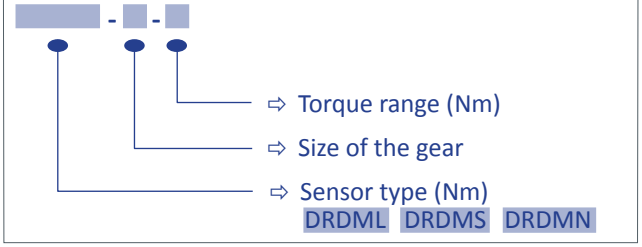

Available accessories

Supply and display unit ValueMasterBase
Motor and gears on demand
Complete testing device