tel. +49 (0) 79 72 93 10-0
hagstrasse 10 . D-74417 gschwend
sales@eth-messtechnik.de

Datasheet

Torque Transducer

DRB-I

Torque range from 0.2 to 1 Nm
for static applications



Features DRB-I

- insensitive by axial and radial forces
- no maintenance needed
- single supply voltage
- suitable for very low torques
- integrated overload protection

This transducer is designed for static, non-rotating torque measurement. It can resist axial and radial forces. It outputs a high signal even at low torques.

Ordering Code

DRB-I- ■ ■ - ■

- ■ = A ⇨ 12pin-connector (Option only applies a /active!)
- ■ = a ⇨ active
- ■ = p ⇨ passive
- ■ ⇨ Torque range (Nm)
- ■ Sensor type

Available Accessories

Supply and display unit: GMV2
ValueMasterBase*
ValueView*

Cables

Couplings

* Only in combination with amplifier „DMSVE“

Mechanical Dimensions DRB-I

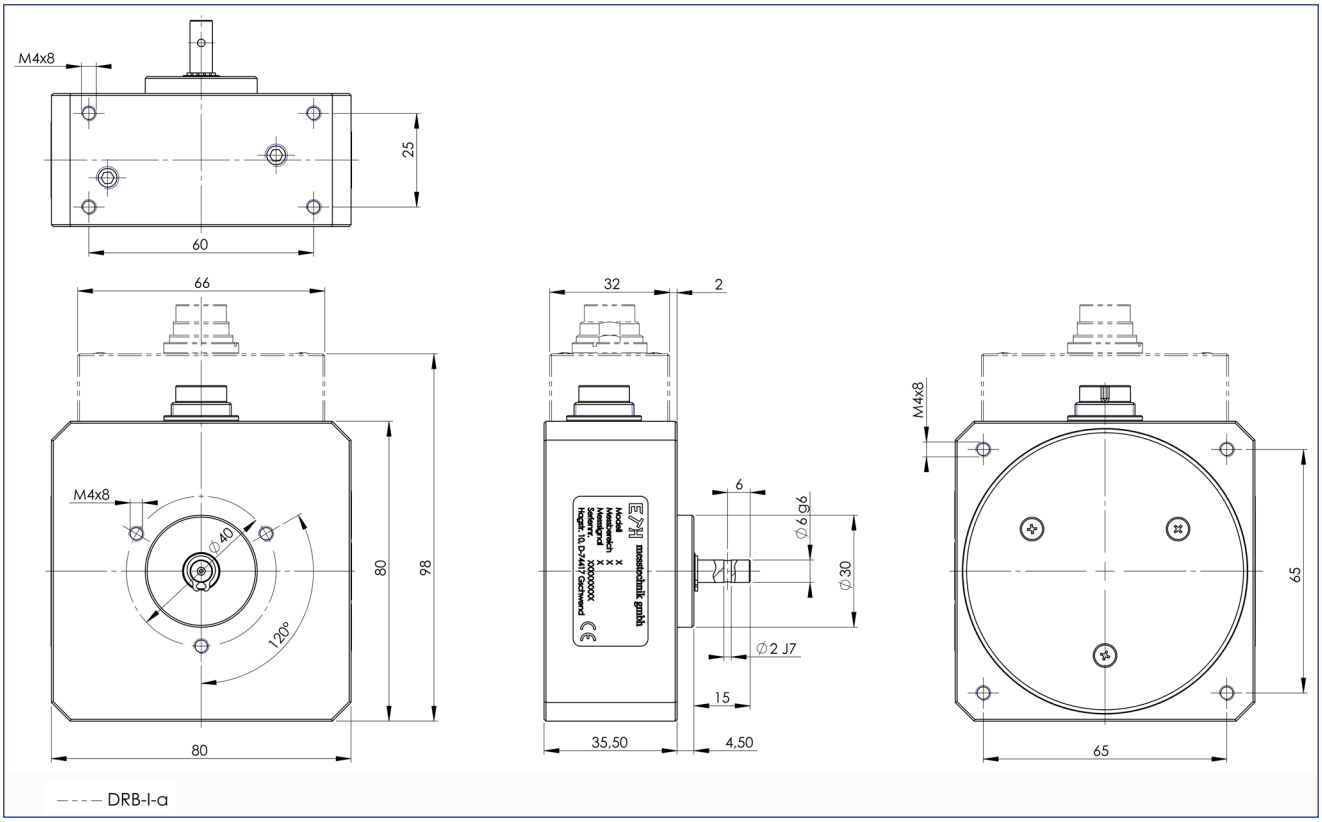

Electrical Specifications DRB-I

Model	active	passive
Torque ranges: (Nm)	| 0.2 | 0.5 | 1 |	| 0.2 | 0.5 | 1 |
Supply voltage:	12 - 28 V DC	12 V max.
Power consumption:	60 - 100 mA	35 mA max.
Rise time 10 - 90 %	120 µs	--
Limit frequency -3 dB:	3 kHz	--
Voltage output:	0 ± 5 V	2 mV / V
Nonlinearity:	0.15 %	0.15 %
Hysteresis:	0.1 %	0.1 %
Deviation at zero point:	≤ ± 100 mV	≤ ± 0,02 mV / V
Internal resistance::	--	350 Ω nominal
Compensated temperature range:	5 - 45 °C	5 - 45 °C
Operating temperature:	0 - 60 °C	0 - 60 °C
Temperature error Zero point: Sensitivity:	 0.02 % / K 0.01 % / K	 0.02 % / K 0.01 % / K
Mechanical overload:	0.2 Nm: 400 % 0.5 Nm: 200 % 1 Nm: 100 %	0.2 Nm: 400 % 0.5 Nm: 200 % 1 Nm: 100 %
Load rating:	axial 25 N radial 50 N	axial 25 N radial 50 N
Weight:	approx. 600 g	approx. 600 g
Internal protection:	IP40	IP40
Connection:	6pin-connector	6pin-connector
Calibration: Works certificate with 25% steps cw and ccw. Other calibrations upon request.		