High Pressure Miniature Sensor



The PHP101 pressure sensor has been designed to measure high pressure in the harshest environments,

With pressure ranges available from 100 up to 800bar, absolute, gage or sealed gage, its all stainless steel construction makes it usable with most fluids used in industry, even corrosive ones.

PHP101 is manufactured with the ruggedized and EFE proprietary sensing technology. Its manufacturing process, including traceable controls and special burn-in, gives the best insurance of high performance and stability in the most challenging applications.

Its small package and low mass make it very adapted to application where space is at a premium.

FEATURES

- Miniature & High Pressure Sensor
- Available up to 800 bar
- Operating from -40 to +140°C
- Signal bandwidth up to 3kHz

APPLICATIONS

X	Aerospace
X	Energy / Nuclear
X	Embedded Applications
X	Test Benches
	Others

TECHNICAL SPECIFICATIONS

- Pressure Specifications

Pressure ranges (FS)	100 bar; 250 bar; 400 bar; 800 bar 1500 PSI; 3000 PSI; 6000 PSI; 10 000 PSI
Type	*Absolut ; Gage; Sealed Gage*
Safe overload	*150% FS*
Burst pressure	*300% FS or 1200bar whichever is less*

- Electrical Specifications

Power Supply	*10Vdc, stabilized and filtered*
Consumption at room remperature	*< 10mA*
Insulation	*> 1000 mOhms under 50Vdc at ambient temperature*
Zero at room temperature	*±3% FS*
Sensitivity	*2 to 5mV/V*
Signal Bandwidth	*DC to 3kHz @-3dB for hydraulic use*

- Accuracy

Non-linearity and hysteresis combined	*±0.25% FS*
Non repeatability	*±0.02% FS typ.*

- Environmental Specifications

Compensated temperature range	0 to +60°C *Option : -40 to +125°C; any range between -40 and +140°C*
Operating temperature range	-40 to +140°C
Combined thermal zero & sensitivity shifts	±0.02%FS/°C
Vibrations	20-2000Hz, 50g max.
Mechanical shock	100g ½ sinus 1ms
Electrical protection	Protected against polarity inversion
EMC protection	Compliant to EN61000
Enclosure protection	IP65 for absolute and sealed gage versions

- Technical Specifications

Electrical connection	AWG26, Viton Jacketed Shielded Cable Ø3mm, 4 wires
Mechanical connection	5/16-24 UNJF-3A male following MS33656-2 ;
Material(s) of wetted parts	Stainless Steel : 316L, 17-4PH (1.4542) and 15-5PH (1.4545)
Weight	< 20g without cable

CODIFICATION

High Performance Miniature Pressure Sensor	PHP10	1	S	100bar	G	32	08/1m	D	0	0
Output Signal										
2 to 5mV/V		*1*								
Material										
Stainless Steel			*S*							
Range										
Example : 100 bar				*100bar*						
Type										
Absolute					*A*					
Gage					*G*					
Sealed Gage					*SG*					
Mechanical connection										
5/16-24 UNJF-3A male following MS33656-2						*32*				
Electrical Connection										
AWG26, Viton Jacketed Shielded Cable, 4 wires							*08/1m*			
Compensated temperature range										
0 to +60°C								*A*		
-40 to +125°C								*D*		
Nonlinearity and hysteresis combined										
±0.25% FS									*1*	
Combined thermal zero & sensitivity shifts										
±0.02% EM/°C										*1*

DIMENSIONS

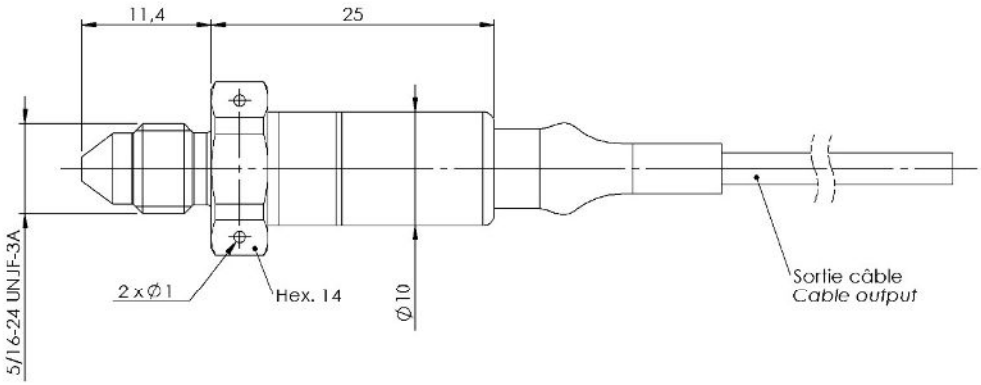

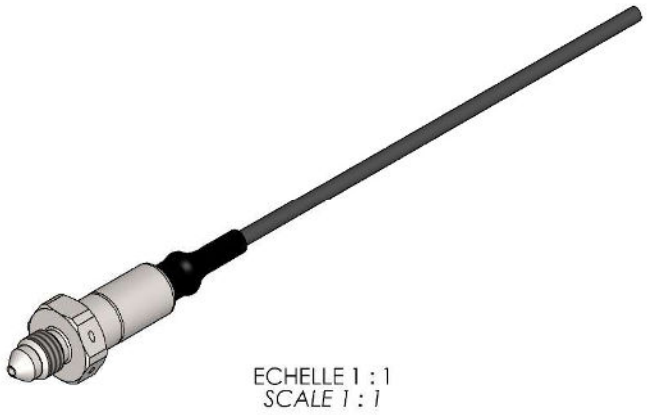

Dimensions : mm

ELECTRICAL WIRING



VITON CABLE- 4 CONDUCTORS	
VOLTAGE OUTPUT	*CONDUCTOR*
+ Excitation	Red
- Excitation	Blue / Black
+ Signal	Green / Yellow
- Signal	White
Sensor's Housing	Shield

AGENT

L'Essor Français Electronique

16 rue Porte à Bateaux – 27540 Ivry-la-Bataille - France
Tel: + 33 2 32 22 35 05 – infos@efe-sensor.com – www.efe-sensor.com