L'Essor Français Electronique

PGA221

General Purpose Aerospace Pressure Transducer



Features

- Available with Built in Electronic
- All Stainless steel
- Robust and reliable sensor
- Large Bandwidth

Applications

- Aerospace
- OEM
- Military
- Test benchs

The PGA220 series is a general purpose aerospace pressure sensor. The sensing element is an advanced piezo-resistive pressure module which together with the latest compensation techniques, provides high performance measurements. It is available with unamplified (mV/V) or amplified (Vdc, mA) outputs. Wetted parts being all stainless steel (other materials are available on request), the sensor is compatible with most media used in Aerospace industry, especially corrosive ones (Skydrol, Kerosene…). High accuracy pressure measurements on test bench is one of the main application for the PGA220. Thanks to compact dimensions and a large choice in mechanical and electrical connections, installation is easier.

Technical specifications

Pressure ranges (FS)	-1/+2bar ; -1/+5bar ; 3bar ; 5bar ; 10bar ; 20bar ; 40bar ; 100bar ; 250bar ; 400bar ; 600bar ; -14.5/+30PSI ; -14.5/+70PSI ; 8000PSI ; 40PSI ; 70PSI ; 150PSI ; 300PSI ; 500PSI ; 1500PSI ; 3000PSI ; 10000PSI ; 5000PSI
Type	Absolute ; Gage
Type (for ranges > 40 bar)	Sealed Gage
Safe overload	150% FS
Burst pressure	300% FS
Output impedance	> 3000 Ohms typ.
Input impedance	> 3500 Ohms typ.
Power supply	5 to 15Vdc
Consumption	< 10mA
Insulation	> 1000 MOhms under 50Vdc at ambient temperature
Output at -100%FS (only for ± range)	Proportional to +100%FS
Output at 0%FS	0mV/V

Technical Specifications

Output at 100%FS	1.5mV/V nom.
Zero and sensitivity settings tolerances	±3% FS
Non linearity and hysteresis combined	±0.25% FS
Non repeatability	±0.02% FS typ.
Compensated temperature range	-55 to +125°C
Operating temperature range	-55 to +125°C
Combined thermal zero & sensitivity shifts	±0.03% FS/°C Option : ±0.02% FS/°C
Constant acceleration in linear vibrations	± 0.02% FS/g (frequency 20-2000Hz, 50g max.)
Mechanical shock	100g ½ sinus 1ms
Electrical protection	Protected against polarity inversion
EMC protection	Compliant to EN61000
Electrical connection	Hermetic MIL-C-26482 - 6 pins Receptacle Option : MIL-DTL-38999 - 6 pins Receptacle
Mechanical connection	1/4 Gaz A male ; M14x1.5-4h male Option : 7/16-20 UNJF-3A male - MS33656-4 ; M10x1-4h male with 80° internal cone
Material(s) of wetted parts	Stainless Steel 316L ; Stainless Steel 17-4PH ; Stainless steel 15-5PH
Weight	< 120g without cable
Enclosure protection	IP67 for absolute & sealed gage version

Codification

General Purpose Aerospace Pressure Transducer	PGA22	1	S	10bar	A	01	03	E	1	1
Output Signal										
mV/V		1								
Material										
Stainless Steels			S							
Range										
Example				10bar						
Type										
Absolute					A					
Gage					G					
Sealed Gage					SG					
Mechanical connection										
M14x1.5-4h male						01				
1/4 Gaz A male						07				
7/16-20 UNJF-3A male - MS33656-4						10				
M10x1-4h male with 80° internal cone						19				
Electrical connection										
Hermetic MIL-C-26482 - 6 pins Receptacle							03			
MIL-DTL-38999 - 6 pins Receptacle							20			
Compensated temperature range										
-55 to +125°C								E		
Non linearity and hysteresis combined										
±0.25% FS									1	
Combined thermal zero & sensitivity shifts										
±0.02% FS/°C										1
±0.03% FS/°C										3

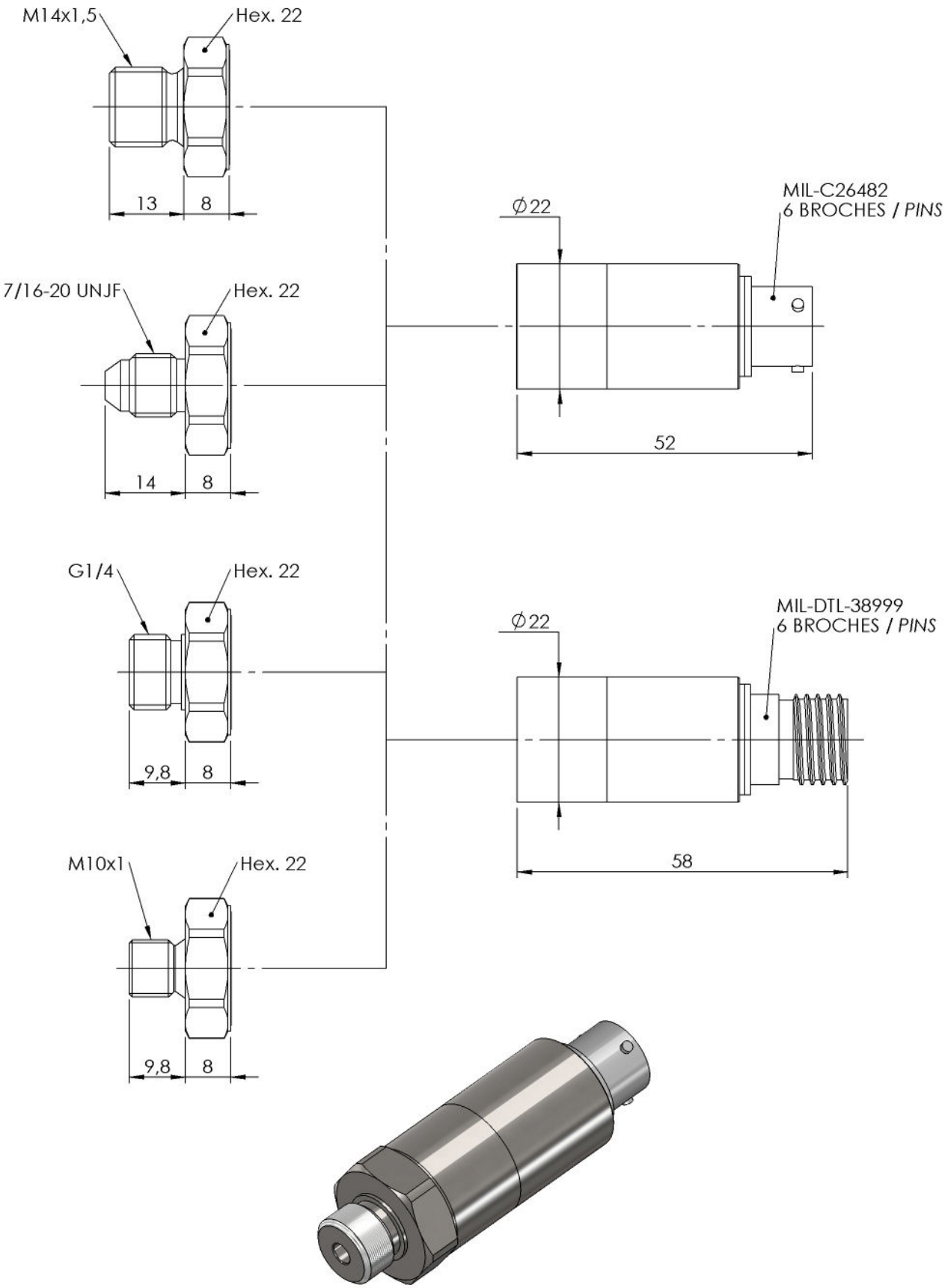

Dimensions : mm



MIL-C26482 - 6 PINS	
mV/V OUTPUT	**PIN**
+ EXCITATION	PIN A
+ SIGNAL	PIN B
- SIGNAL	PIN C
- EXCITATION	PIN D
SENSOR HOUSING	PINS E &F

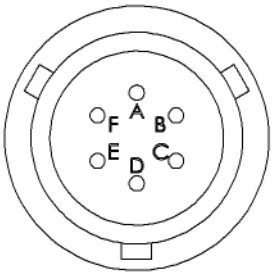



MIL-DTL-38999 - 6 PINS	
mV/V OUTPUT	**PIN**
+ EXCITATION	PIN 1
+ SIGNAL	PIN 3
- SIGNAL	PIN 4
- EXCITATION	PIN 2
NC	PIN 5
NC	PIN 6
SENSOR HOUSING	CONNECTOR HOUSING

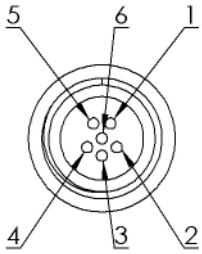

Agent :

E.F.E.
L'ESSOR FRANCAIS ELECTRONIQUE
16 Rue Porte a Bateaux - 27540 Ivry-la-Bataille - FRANCE
Tel : 33 (0)2 32 22 35 05 - Fax : 33 (0)2 32 36 93 08
www.efe-sensor.com - infos@efe-sensor.com