L'Essor Français Electronique

PDM221

Compact Differential Pressure Transducer



Features

- All Stainless steel
- Operating from -40 to +125°C
- Outputs : 0-5V, 4-20mA, 0,5-4,5V
- Wet/wet differential pressure

Applications

- Automotive - on vehicule
- Aerospace
- Energy / Nuclear
- Test benchs

The PDM220 series pressure sensors provide accurate differential pressure measurement of gas and liquids in ranges from 250mbar up to 600bar. Standard unamplified and amplified analog outputs are available : mV/V, 0.5-4.5Vdc, 0-5Vdc and 2-wire 4 to 20mA current loop. They are suitable for uni or bi-directional measurement. Their construction being all stainless steel, they are compatible with most media, including corrosive fluids used in automotive and aerospace industries.

Technical specifications

Uni-directional pressure ranges (FS)	250mbar ; 500mbar ; 1bar ; 2bar ; 3bar ; 5bar ; 10bar ; 20bar ; 40bar ; 100bar ; 250bar ; 400bar ; 600bar
Bi-directional pressure ranges (FS)	±250mbar ; ±500mbar ; ±1bar ; ±2bar ; ±3bar ; ±5bar ; ±10bar ; ±20bar ; ±40bar ; ±100bar ; ±250bar ; ±400bar ; ±600bar
Type	Differential
Line pressure	Less or equal to nominal pressure range
Safe overload	150% FS
Burst pressure	300% FS
Output impedance	> 3000 Ohms typ.
Input impedance	> 3500 Ohms typ.
Power supply	10Vdc stabilized and regulated
Consumption	< 10mA
Insulation	> 1000 MOhms under 50Vdc at ambient temperature
Output at -100%FS (only for ± range)	Proportional to +100%FS
Output at 0%FS	0mV/V

Technical Specifications

Output at 100%FS	1 to 2mV/V
Zero and sensitivity settings tolerances	±3% FS
Non linearity and hysteresis combined	±0.25% FS Option : ±0.15% FS
Non repeatability	±0.05% FS
Compensated temperature range	0 to +60°C Option : -25 to +85°C ; -25 to +125°C
Operating temperature range	-25 to +125°C
Combined thermal zero & sensitivity shifts	±0.02% FS/°C
EMC protection	Compliant to EN61000
Electrical connection	DIN 43650 Receptacle - 4 pins Option : Hermetic MIL-C-26482 - 6 pins Receptacle
Mechanical connection	1/4 Gaz A male ; 1/4 NPT male ; M14x1.5-4h male Option : 7/16-20 UNJF-3A male - MS33656-4 ; M10x1-4h male with 80° internal cone
Material(s) of wetted parts	Stainless Steel 316L ; Stainless Steel 17-4PH ; Stainless steel 15-5PH
Enclosure protection	IP65

Codification

Compact Differential Pressure Transducer	PDM22	1	S	1bar	D	01	01	A	1	1
Output Signal										
mV/V		1								
Material										
Stainless Steels			S							
Range										
Example				1bar						
Type										
Differential					D					
Mechanical connection										
M14x1.5-4h male						01				
1/4 Gaz A male						07				
7/16-20 UNJF-3A male - MS33656-4						10				
1/4 NPT male						13				
M10x1-4h male with 80° internal cone						19				
Electrical connection										
DIN 43650 Receptacle - 4 pins							01			
Hermetic MIL-C-26482 - 6 pins Receptacle							03			
Compensated temperature range										
0 to +60°C								A		
-25 to +85°C								B		
-25 to +125°C								C		
Non linearity and hysteresis combined										
±0.25% FS									1	
±0.15% FS									5	
Combined thermal zero & sensitivity shifts										
±0.02% FS/°C										1

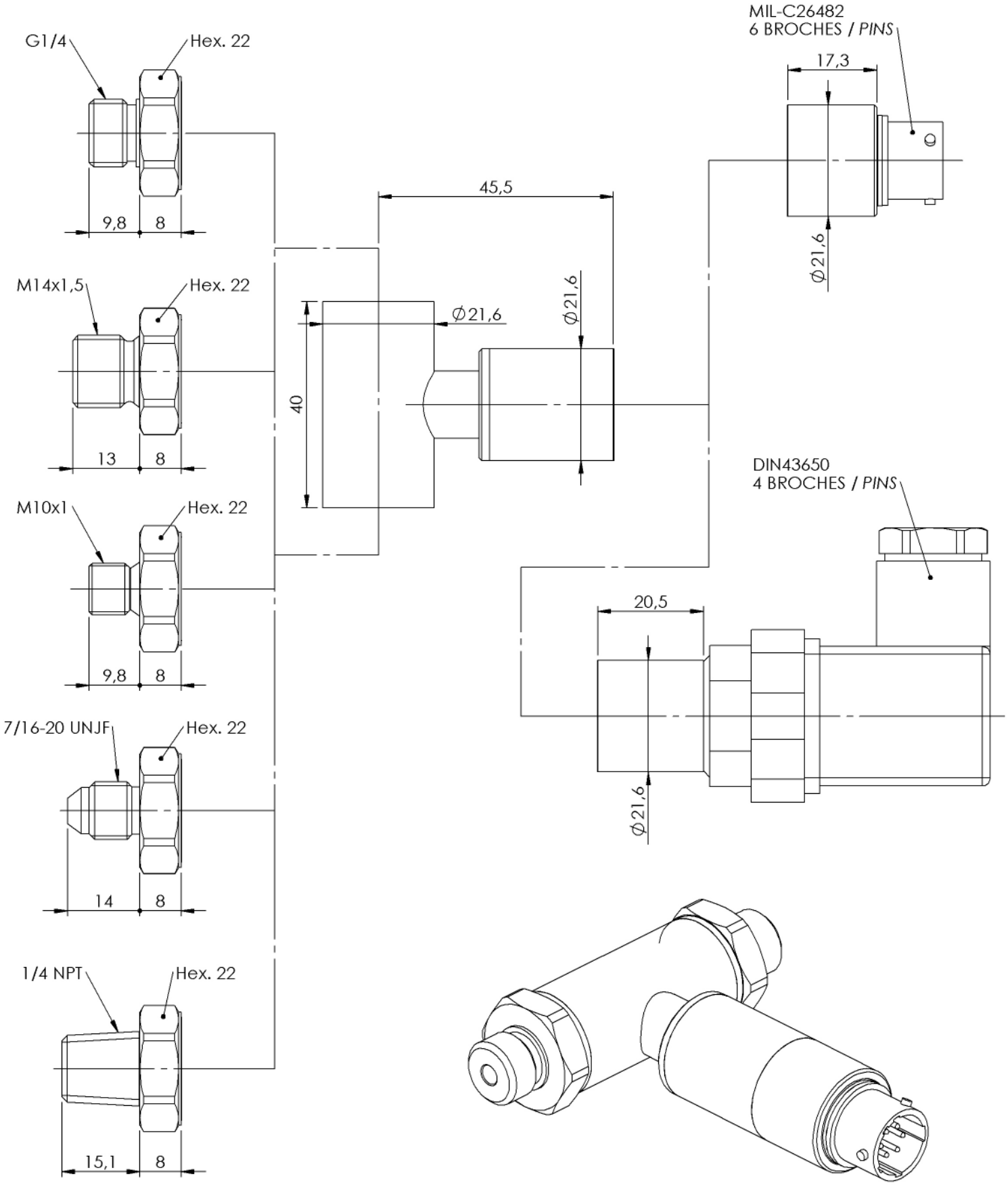

Dimensions : mm



MIL-C26482 - 6 PINS

mV/V OUTPUT	PIN
+ EXCITATION	PIN A
+ SIGNAL	PIN B
- SIGNAL	PIN C
- EXCITATION	PIN D
SENSOR HOUSING	PINS E &F

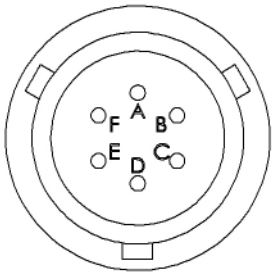

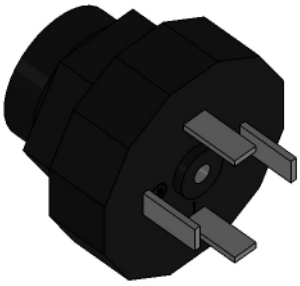

DIN 43650 - 4 PINS

mV/V OUTPUT	PIN
+ EXCITATION	PIN 1
+ SIGNAL	PIN 2
- SIGNAL	PIN 3
- EXCITATION	PIN T

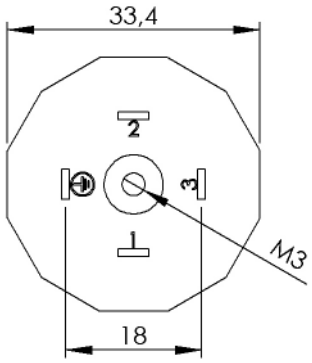

Dimensions : mm

Agent :

E.F.E.
L'ESSOR FRANCAIS ELECTRONIQUE
16 Rue Porte a Bateaux - 27540 Ivry-la-Bataille - FRANCE
Tel : 33 (0)2 32 22 35 05 - Fax : 33 (0)2 32 36 93 08
www.efe-sensor.com - infos@efe-sensor.com